NW 1/4 SEC 6 TOWNSHIP 64S RANGE 76E OF THE COPPER RIVER MERIDIAN, ALASKA

LEGEND

BASE INFORMATION

- HYDROGRAPHY
- SURVEY LINE
- SURVEY LOT LINE
- TOWNSHIP/SECTION GRID
- 1/4 SECTION LINE
- HIGHWAY
- ROAD
- TRAIL
- RAILROAD
- ELECTRICAL POWER LINE
- TELEPHONE LINE
- PIPELINE
- AIRPORT/LANDING STRIP
- HORIZONTAL CONTROL
- CONTROL MONUMENT

STATUS INFORMATION

- TITLE
- BOUNDARY
- CLASSIFICATION
- DISPOSAL
- MUNICIPAL
- RESTRICTION
- FEDERAL ACTION
- MENTAL HEALTH TRUST
- LIMITS OF ACTION
- NAVIGATIONAL AID
- CABIN PERMIT
- TRAPPING CABIN PERMIT
- TRESPASS LOCATION

SURFACE WATER RIGHTS

- APPLICATION
- PERMIT
- CERTIFICATE

SUB-SURFACE WATER RIGHTS

- APPLICATION
- PERMIT
- CERTIFICATE

IN-STREAM FLOW RESERVATION

- APPLICATION
- CERTIFICATE

DAM, WEIR, BARRIER

- APPLICATION
- PERMIT
- CERTIFICATE

VICINITY MAP

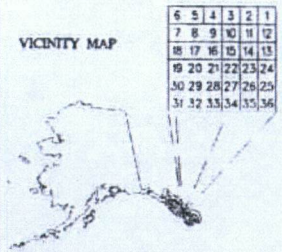

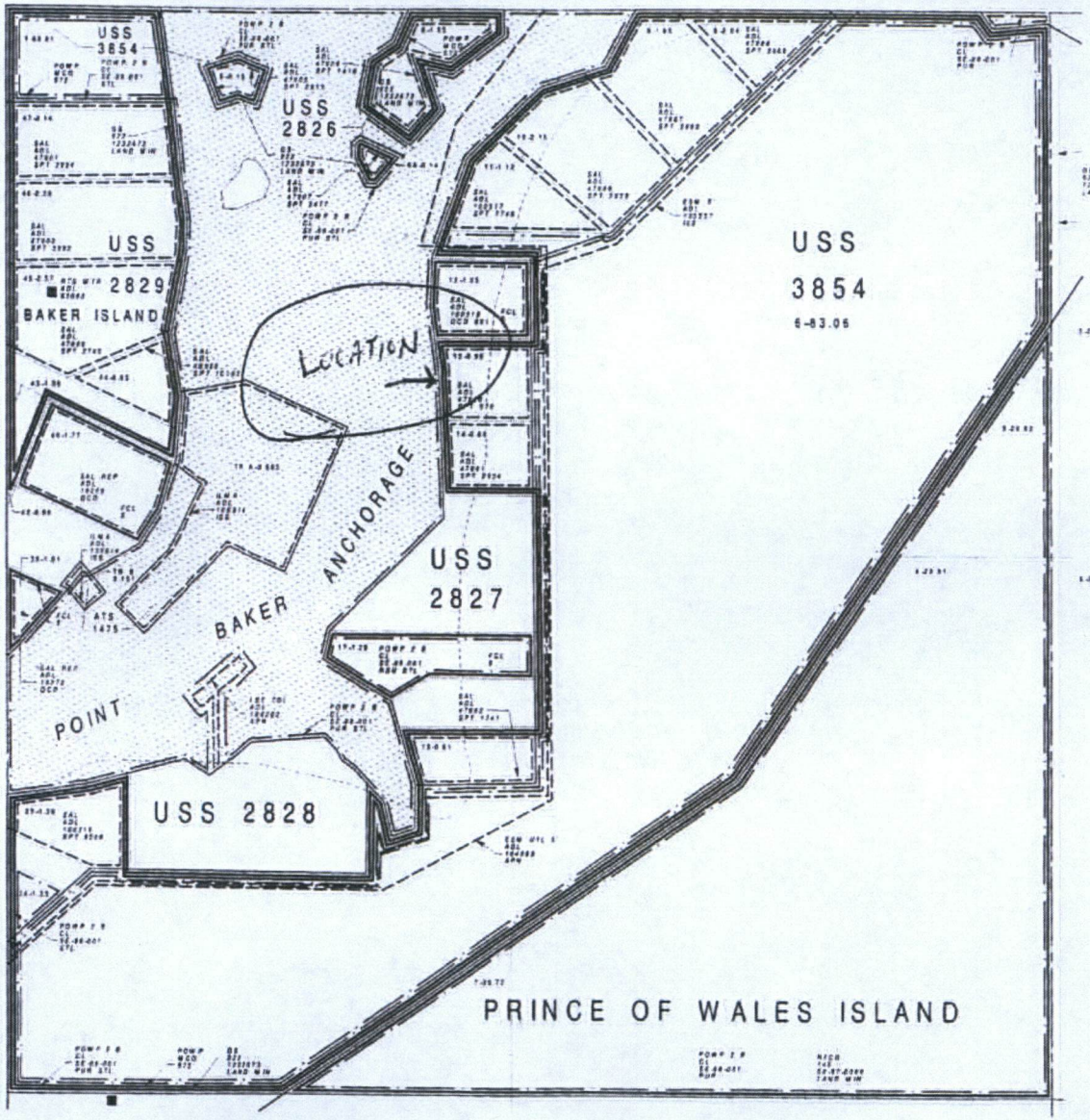

STATUS PLAT

THE STATE OWNS ALL LAND UNDER WATERS THAT ARE NAVIGABLE IN-FACT, ARE SUBJECT TO THE EBB AND FLOW OF THE TIDES, OR ARE RIPARIAN OR LITTORAL TO UPLANDS OWNED BY THE STATE

BASED ON:

COORDINATES:
ALASKA STATE PLANE ZONE 1
SE CORNER OF TOWNSHIP
X 2726468.196
Y 1620052.041
LAT 56 16 12.832 N
LONG 133 27 56.996 W

HYDROGRAPHY:
USGS PETERSBURG (B5) REVISED BY USFS FROM AERIAL PHOTOGRAPHY 1994

LAND NET:
ADL PROTRACTION DIAGRAM CR15-6, APPROVED 01/09/1996
USRS, 1700.05 ACRES; OFFICIALLY FILED 02/16/1996
USS 2826; ACCEPTED 07/26/1951
USS 2827; ACCEPTED 07/26/1951
USS 2828; ACCEPTED 07/26/1951
USS 2829; ACCEPTED 07/26/1951
USS 3558; ACCEPTED 02/12/1963
USS 3854; ACCEPTED 02/12/1963
ASLS 810141; FILED 09/19/1983
ATS 1387; RECORDED 11/19/1993
ATS 1388; RECORDED 02/08/2002
ATS 1387; RECORDED 11/19/1993
ATS 1475; RECORDED 02/02/1996

OTHER ACTIONS AFFECTING DISPOSAL OR USE OF STATE LANDS. SEE THE LAS CASEFILE OR ORIGINAL SOURCE DOCUMENTS FOR ADDITIONAL INFORMATION

ENTIRELY WITH PETERSBURG RECORDING DISTRICT
SUBJECT TO PRINCE OF WALES ISLAND AREA PLAN
NFCG 145, 339, 340 AND 375, PATENT 50-97-0089
PER USRS OFFICIALLY FILED 02/16/1996
CG 122, PATENTS 50-96-0731 AND 50-97-0089 PER USRS OFFICIALLY FILED 02/16/1996
MCO 573, SEE CASEFILE FOR ADDITIONAL INFORMATION

GRAPHIC ILLUSTRATION ONLY.
SOURCE DOCUMENTS REMAIN THE OFFICIAL RECORD.
CONSULT LAND ADMINISTRATION SYSTEM (LAS)
CASEFILE FOR ADDITIONAL INFORMATION

SCALE
1 inch = 200 feet
200 150 100 50 0 200 400 FEET

ATTENTION STATUS PLAT USERS: ON THIS PLAT, ALL STATU LINES CLOSE FOR ACTIONS THAT EXTEND INTO ADJACENT TOWNSHI THIS INCLUDES STATUS LINES SUCH AS DISPOSAL, MUNICIPAL, TITLE CLASSIFICATION, ETC. PLEASE REFER TO ADJACENT TOWNSHIPS OR TO DETERMINE IF ACTIONS EXTEND BEYOND THE BOUNDARIES SHO THIS PLAT. REMEMBER TITLE, CLASSIFICATION, AND RESTRICTION I ALWAYS CLOSE ON ALL PLATS

Mr. Robert Searing
Proposed Pier and Docks
POA-2007-1124-2
Point Baker Anchorage
Point Baker, Alaska
Date: December 9, 2007
Sheet 1 of 3

NW 1/4
SEC 6
SP
TWP 64S
RNG 76E
CRM

USER: OEOROE
DATE: Wednesday November 17, 2004 at 2:12 PM

VERSION: Am/Info 8.0.2/Tue Feb 22 08:01:14 PST 2000

Attachment 4

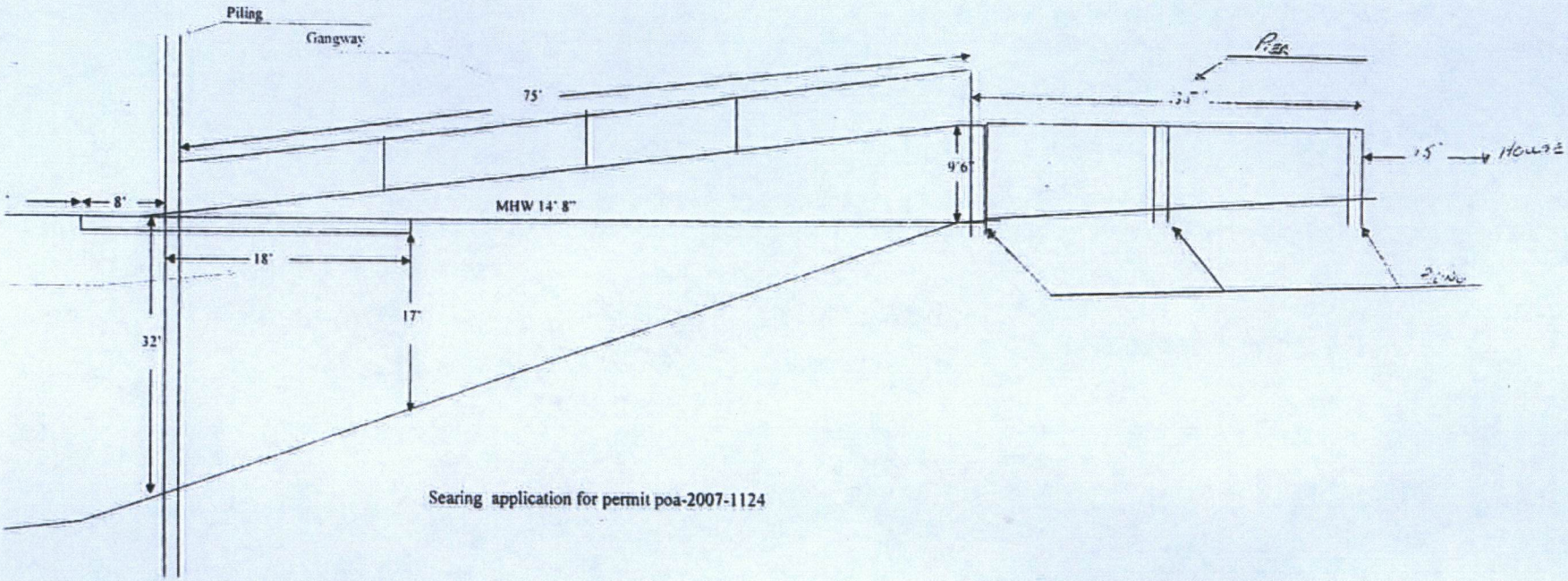

Searing application for permit poa-2007-1124

Mr. Robert Searing
Proposed Pier and Docks
POA-2007-1124-2
Point Baker Anchorage
Point Baker, Alaska
Date: December 9, 2007
Sheet 3 of 3

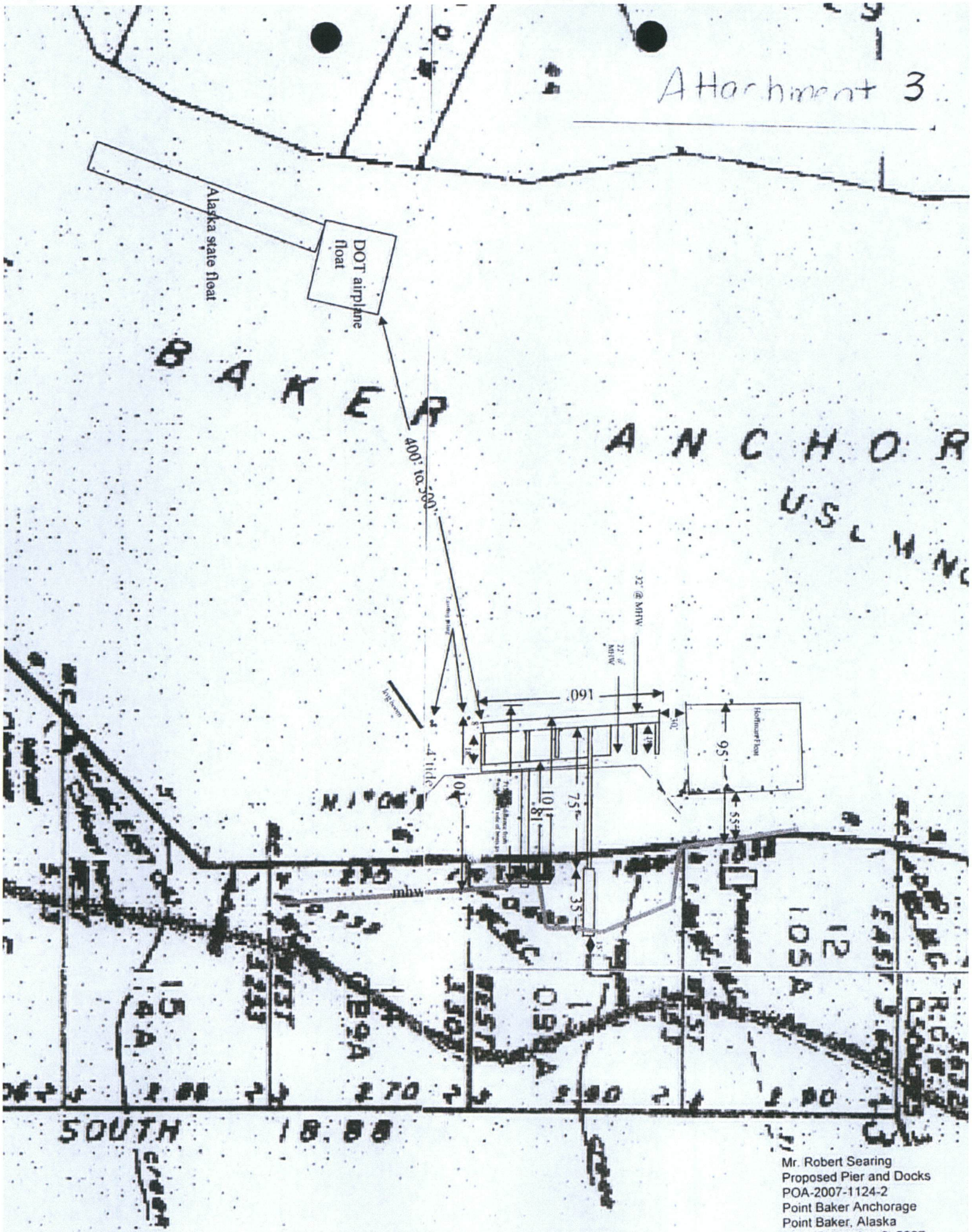

Mr. Robert Searing
Proposed Pier and Docks
POA-2007-1124-2
Point Baker Anchorage
Point Baker, Alaska
Date: December 9, 2007
Sheet 2 of 3