VICINITY MAP

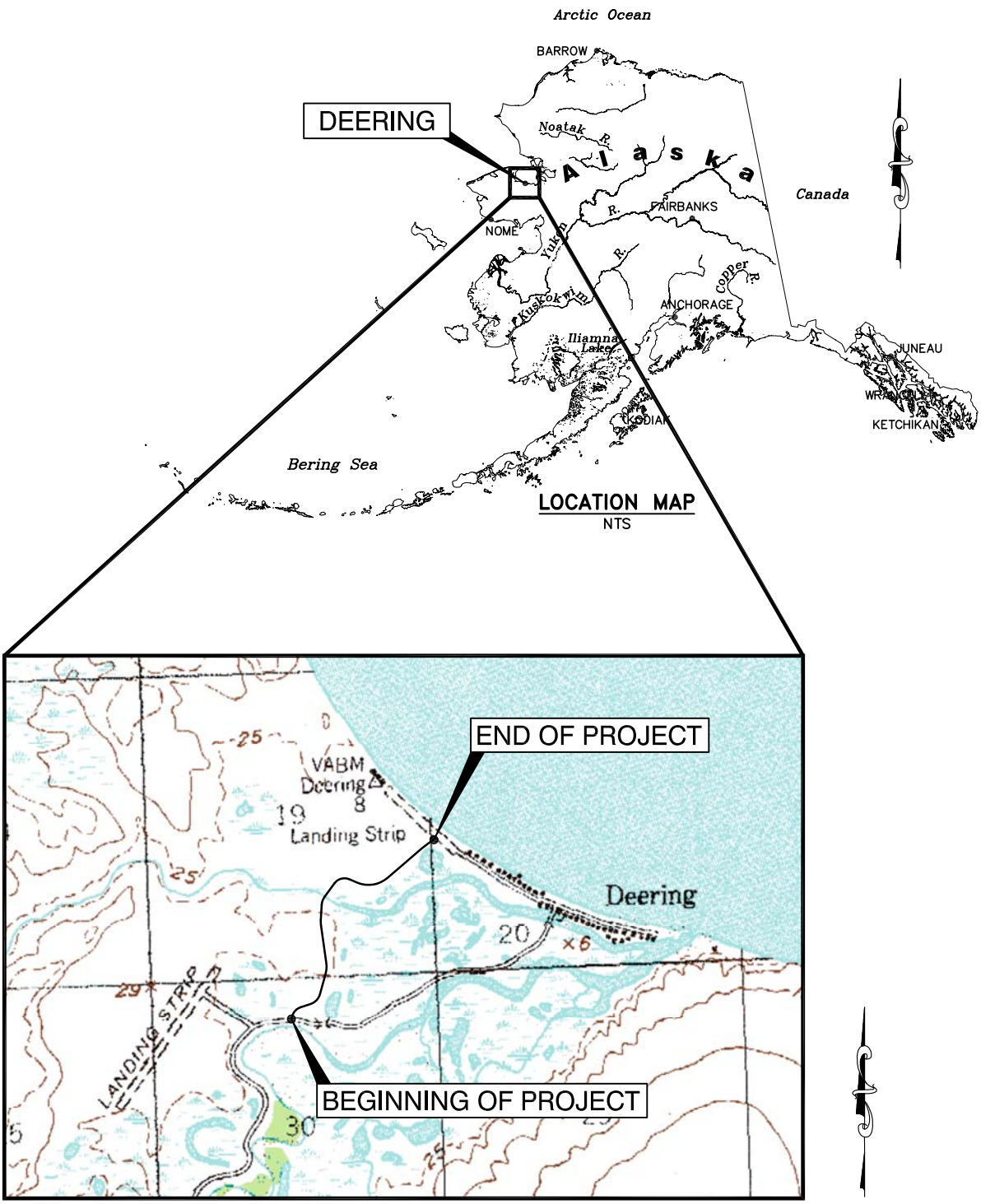

VICINITY MAP

SCALE: NTS
SOURCE: U.S.G.S. QUAD
KOTZEBUE A2

Deering, Alaska
Directions to site: From the airport take Deering Road east for 0.1 miles. The project begins on the north side of Deering Road.

Applicant:	NATIVE VILLAGE OF DEERING
File No. :	POA-2014-121
Waterway:	SMITH CREEK
Proposed activity:	WEST AIRPORT ROAD CONSTRUCTION
Sec.19 & 30 T. 08 N R. 19 W	M. KATEEL RIVER MERIDIAN
Lat.: N 66.08°	Long.: 165.71° W
Sheet 1 of 14	Date: 05 /17 /2016

Drawing: K:\JOBS\32140053 WEST AIRPORT RD\ACAD-ENVIRO\USACE\32140053_FIG1_COE.DWG - Layout: FIG1
User: RBURDICK May 17, 2016 - 9:15am Xrefs: USACE-8SX11P.DWG - Images: KOTZEBUE_A2.TIF

Drawing: K:\JOBS\32140053 WEST AIRPORT RD\ACAD-ENVIRO\USACE\32140053_FIG2_COE.DWG - Layout: FIG2
User: RBURDICK May 17, 2016 - 9:15am Xrefs: USACE-85X11L.DWG - Images: KOTZEBUE_A2.TIF

WEST AIRPORT ROAD PROJECT
SITE PLAN

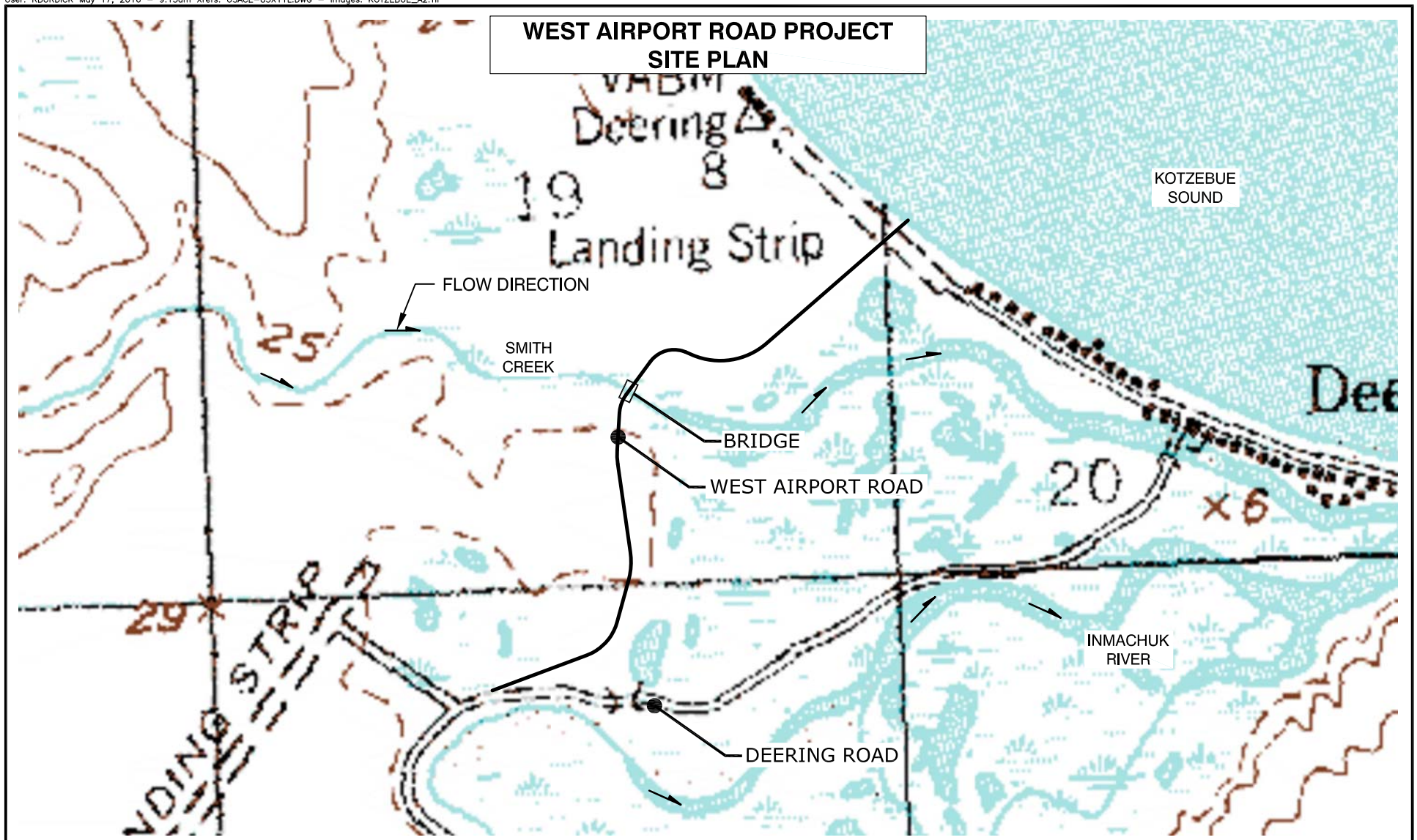

Deering, Alaska
Directions to site: From the airport take Deering Road east for 0.1 miles. The project begins on the north side of Deering Road.

0 500 1000
SCALE IN FEET

Applicant: NATIVE VILLAGE OF DEERING
File No. : POA-2014-121
Waterway: SMITH CREEK
Proposed activity: WEST AIRPORT ROAD CONSTRUCTION
Sec.19 & 30 T. 08 N R. 19 W M. KATEEL RIVER MERIDIAN
Lat.: N 66.08° Long.: 165.71° W
Sheet 2 of 14 Date: 05 /17 /2016

WEST AIRPORT ROAD PROJECT
TYPICAL SECTIONS

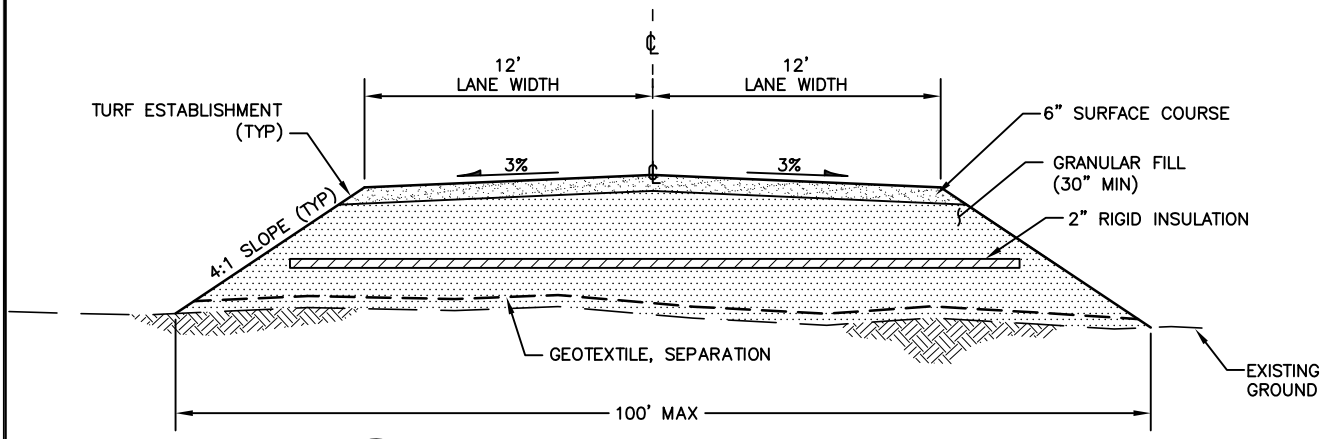

1 / – **TWO-LANE CROWN FILL SECTION**
SCALE: NTS

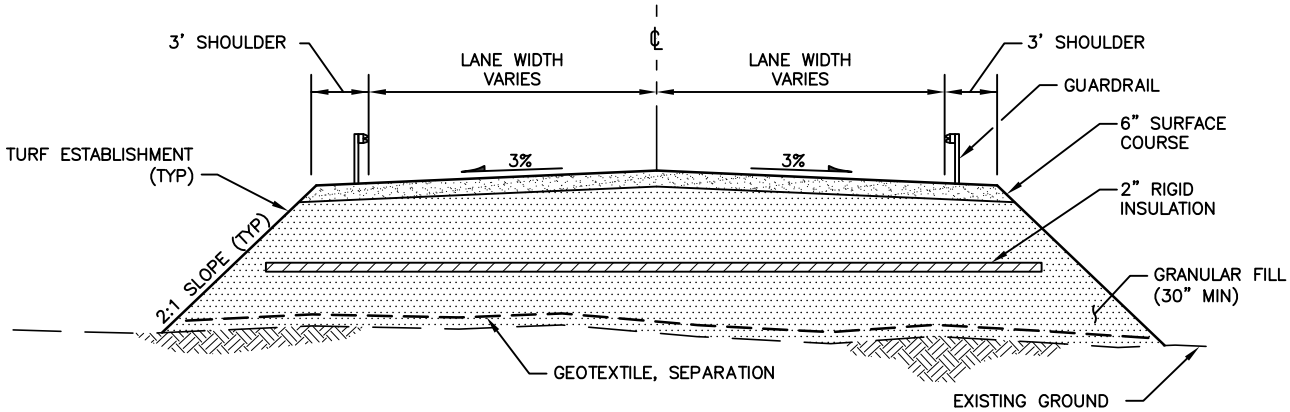

2 / – **TWO-LANE CROWN SECTION WITH GUARDRAIL**
SCALE: NTS

Applicant: NATIVE VILLAGE OF DEERING
File No. : POA-2014-121
Waterway: SMITH CREEK
Proposed activity: WEST AIRPORT ROAD CONSTRUCTION
Sec.19 & 30 T. 08 N R. 19 W M. KATEEL RIVER MERIDIAN
Lat.: N 66.08° Long.: 165.71° W
Sheet 3 of 14 Date: 05 /17 /2016

Drawing: K:\JOBS\32140053 WEST AIRPORT RD\ACAD-ENVIRO\USACE\32140053_FIG3-5_CDE.DWG - Layout: FIG3
User: RBURDICK May 17, 2016 - 9:09am Xrefs: USACE-8SX11P.DWG - Images: None

WEST AIRPORT ROAD PROJECT
TYPICAL SECTIONS

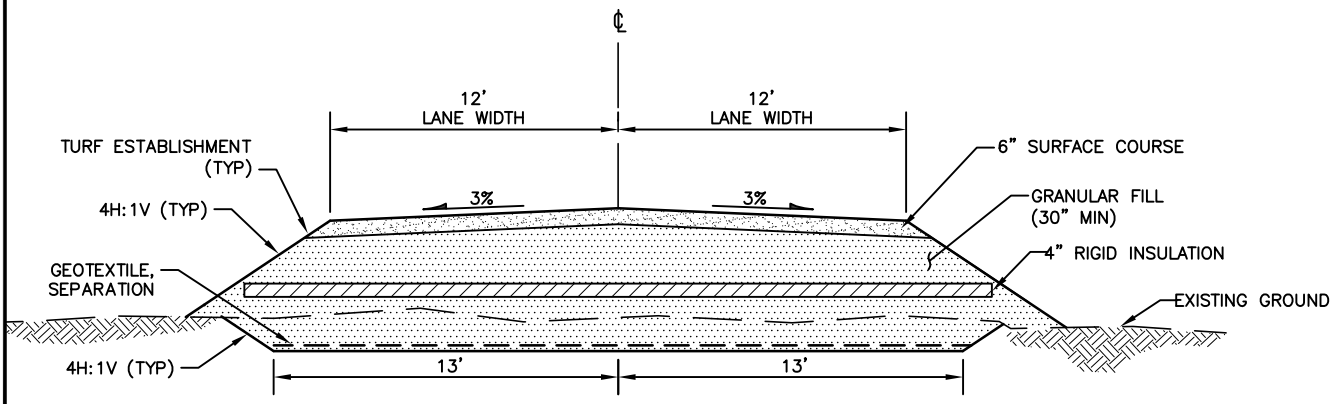

1 / – TWO-LANE CROWN FILL SECTION WITH EXCAVATION

SCALE: NTS

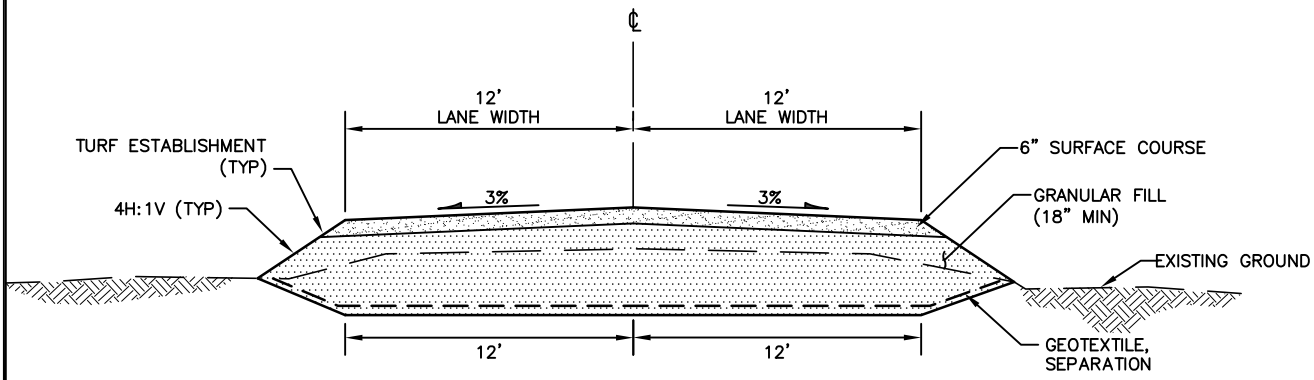

2 / – TWO-LANE CROWN ROAD RECONSTRUCTION

SCALE: NTS

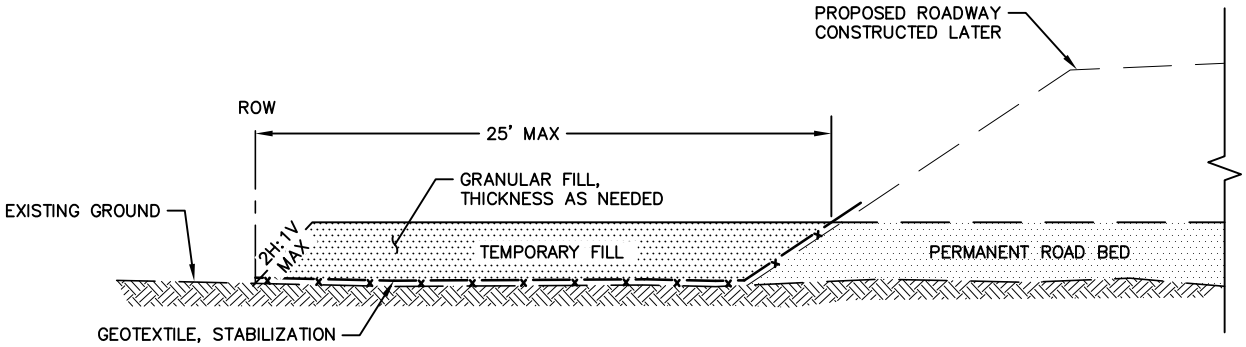

3 / – TEMPORARY CONSTRUCTION PAD

SCALE: NTS

Applicant: NATIVE VILLAGE OF DEERING
File No. : POA-2014-121
Waterway: SMITH CREEK
Proposed activity: WEST AIRPORT ROAD CONSTRUCTION
Sec.19 & 30 T. 08 N R. 19 W M. KATEEL RIVER MERIDIAN
Lat.: N 66.08° Long.: 165.71° W
Sheet 4 of 14 Date: 05 /17 /2016

Drawing: K:\JOBS\32140053 WEST AIRPORT RD\ACAD-ENVIRO\USACE\32140053_FIG3-5_CDE.DWG - Layout: FIG4
User: RBURDICK May 17, 2016 - 9:09am Xrefs: USACE-8SX11P.DWG - Images: None

WEST AIRPORT ROAD PROJECT
TYPICAL SECTIONS

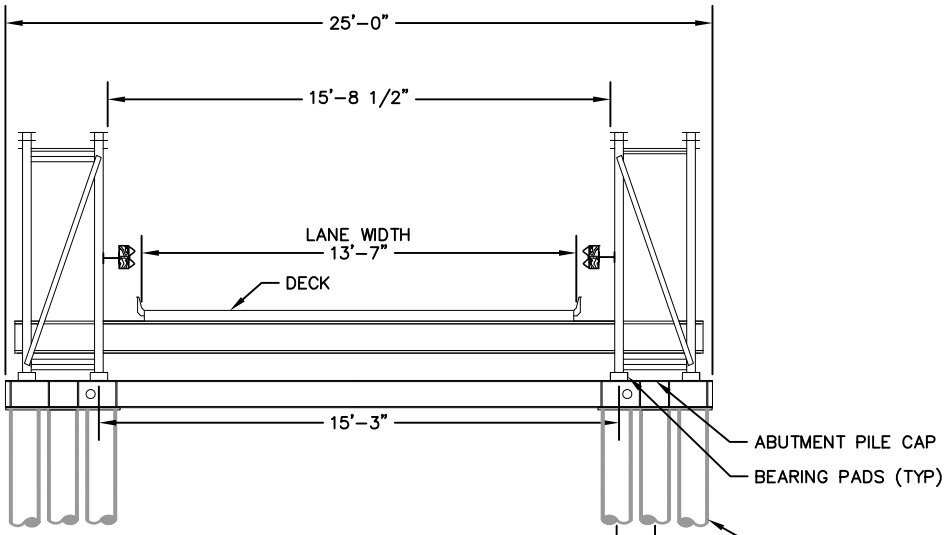

1 — **VEHICULAR BRIDGE SECTION**
SCALE: NTS

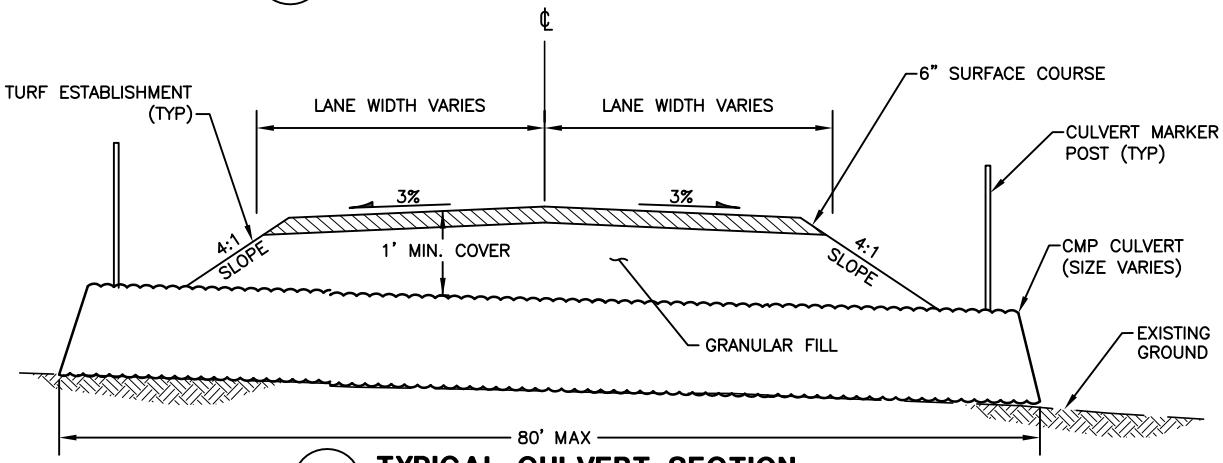

2 — **TYPICAL CULVERT SECTION**
SCALE: NTS

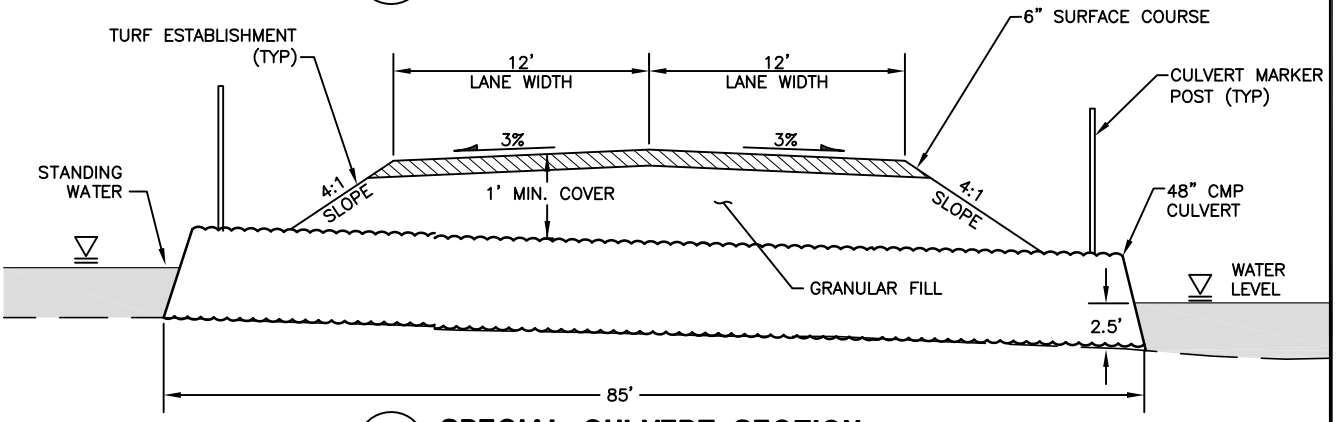

3 — **SPECIAL CULVERT SECTION**
SCALE: NTS

Applicant: NATIVE VILLAGE OF DEERING
File No. : POA-2014-121
Waterway: SMITH CREEK
Proposed activity: WEST AIRPORT ROAD CONSTRUCTION
Sec.19 & 30 T. 08 N R. 19 W M. KATEEL RIVER MERIDIAN
Lat.: N 66.08° Long.: 165.71° W
Sheet 5 of 14 Date: 05 /17 /2016

Drawing: K:\JOBS\32140053 WEST AIRPORT RD\ACAD-ENVIRO\USACE\32140053_FIG3-5_CDE.DWG - Layout: FIG5
User: RBURDICK May 17, 2016 - 9:09am Xrefs: USACE-85X11P.DWG - Images: None

Drawing: K:\JOBS\32140053 WEST AIRPORT RD\ACAD-ENVIRO\USACE\32140053_FIG6-12_COE.DWG - Layout: FIG6
User: RBURDICK May 17, 2016 - 8:45am Xrefs: (DIESEL evaluation failed) - Images: None

WEST AIRPORT ROAD PROJECT
SITE PLAN - KEY MAP

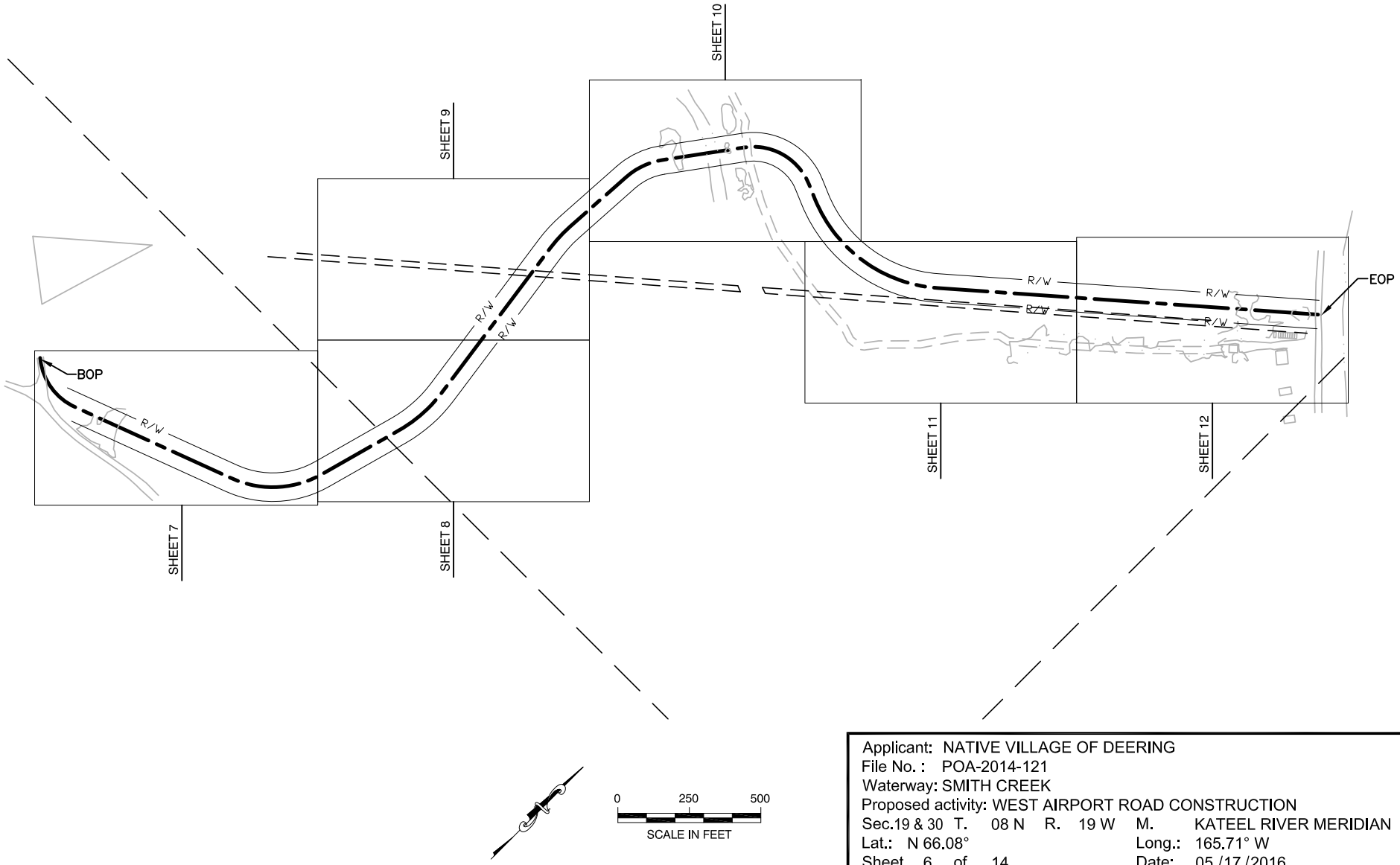

Applicant: NATIVE VILLAGE OF DEERING
File No. : POA-2014-121
Waterway: SMITH CREEK
Proposed activity: WEST AIRPORT ROAD CONSTRUCTION
Sec.19 & 30 T. 08 N R. 19 W M. KATEEL RIVER MERIDIAN
Lat.: N 66.08° Long.: 165.71° W
Sheet 6 of 14 Date: 05 /17 /2016

Drawing: K:\JOBS\32140053 WEST AIRPORT RD\ACAD-ENVIRO\USACE\32140053_FIG6-12_COE.DWG - Layout: FIG7
User: RBURDICK May 17, 2016 - 8:45am Xrefs: (DIESEL evaluation failed) - Images: None

WEST AIRPORT ROAD PROJECT
SITE PLAN - SHEET 7

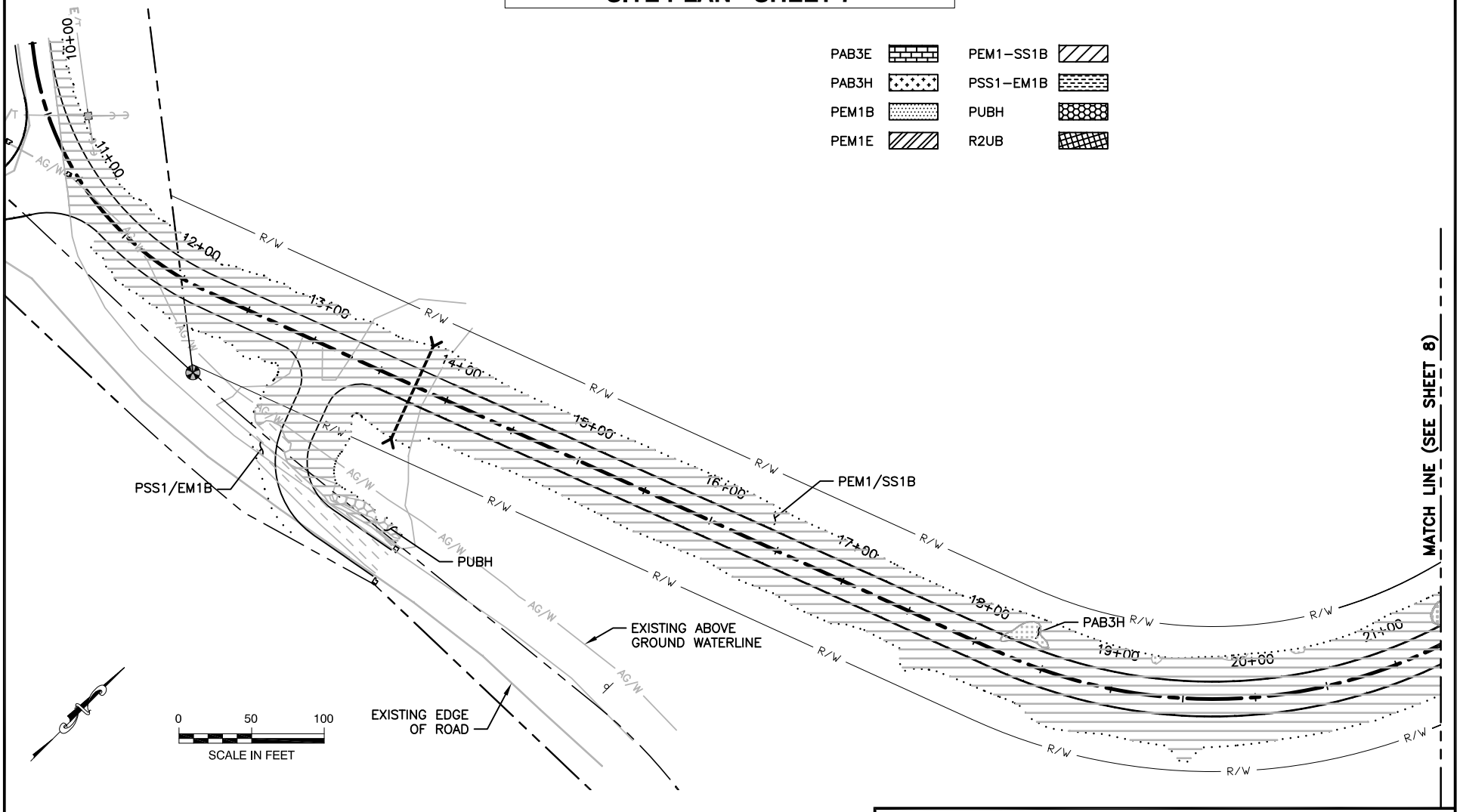

LEGEND

PROPOSED ROAD TOE OF FILL		PROPOSED GUARDRAIL	
PROPOSED ROAD SHOULDER		PROPOSED CMP	
PROPOSED ROAD CENTERLINE		PROPOSED RIGHT OF WAY	R/W
EXISTING RIGHT OF WAY		EXISTING WATER BODY	

Applicant: NATIVE VILLAGE OF DEERING
File No. : POA-2014-121
Waterway: SMITH CREEK
Proposed activity: WEST AIRPORT ROAD CONSTRUCTION
Sec.19 & 30 T. 08 N R. 19 W M. KATEEL RIVER MERIDIAN
Lat.: N 66.08° Long.: 165.71° W
Sheet 7 of 14 Date: 05 /17 /2016

Drawing: K:\JOBS\32140053 WEST AIRPORT RD\ACAD-ENVIRO\USACE\32140053_FIG6-12_COE.DWG - Layout: FIG8
User: RBURDICK May 17, 2016 - 8:45am Xrefs: (DIESEL evaluation failed) - Images: None

WEST AIRPORT ROAD PROJECT
SITE PLAN - SHEET 8

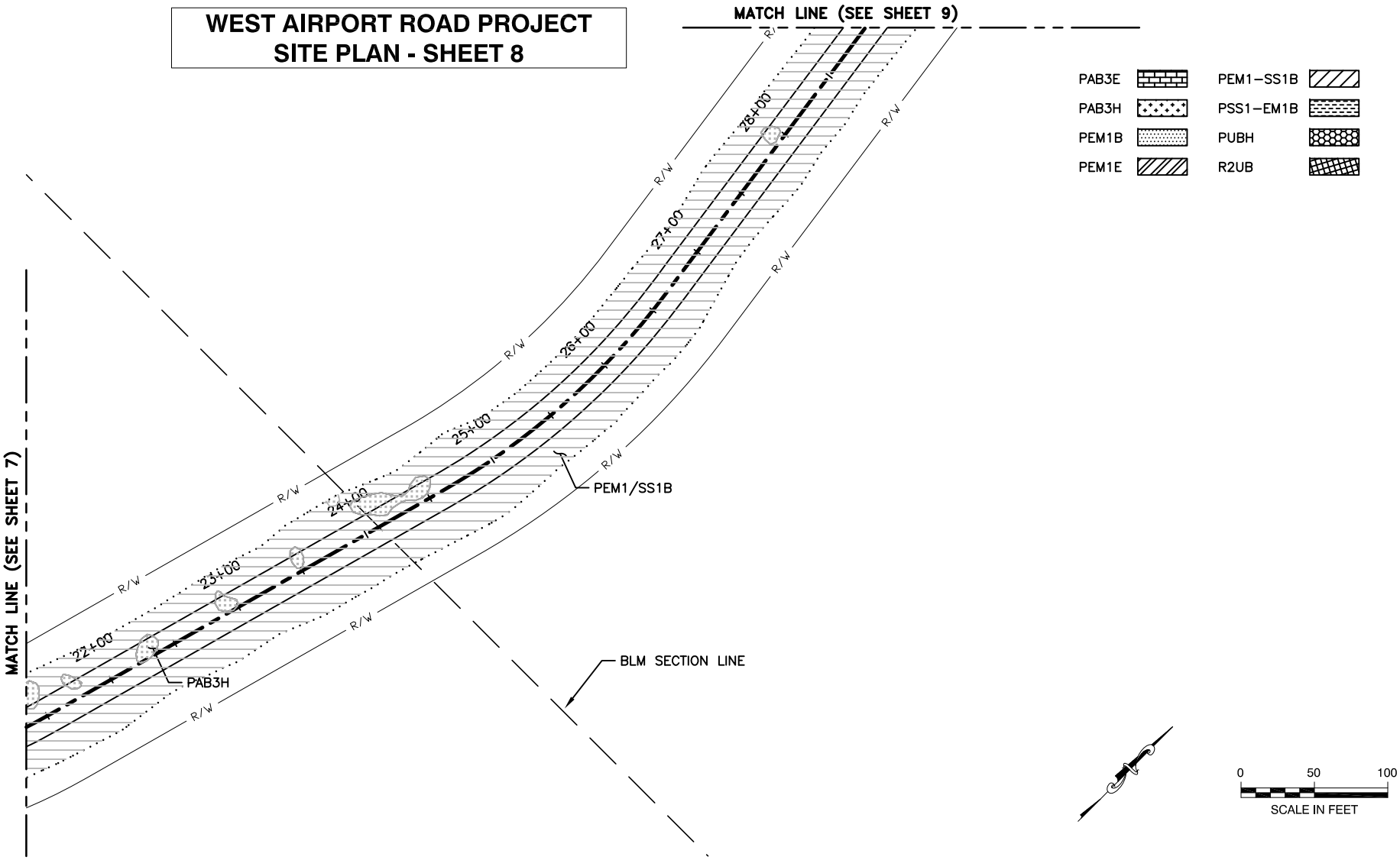

LEGEND

PROPOSED ROAD TOE OF FILL		PROPOSED GUARDRAIL	
PROPOSED ROAD SHOULDER		PROPOSED CMP	
PROPOSED ROAD CENTERLINE		PROPOSED RIGHT OF WAY	R/W
EXISTING RIGHT OF WAY		EXISTING WATER BODY	

Applicant: NATIVE VILLAGE OF DEERING
File No. : POA-2014-121
Waterway: SMITH CREEK
Proposed activity: WEST AIRPORT ROAD CONSTRUCTION
Sec.19 & 30 T. 08 N R. 19 W M. KATEEL RIVER MERIDIAN
Lat.: N 66.08° Long.: 165.71° W
Sheet 8 of 14 Date: 05 /17 /2016

Drawing: K:\JOBS\32140053 WEST AIRPORT RD\ACAD-ENVIRO\USACE\32140053_FIG6-12_COE.DWG - Layout: FIG9
User: RBURDICK May 17, 2016 - 8:45am Xrefs: (DIESEL evaluation failed) - Images: None

WEST AIRPORT ROAD PROJECT
SITE PLAN - SHEET 9

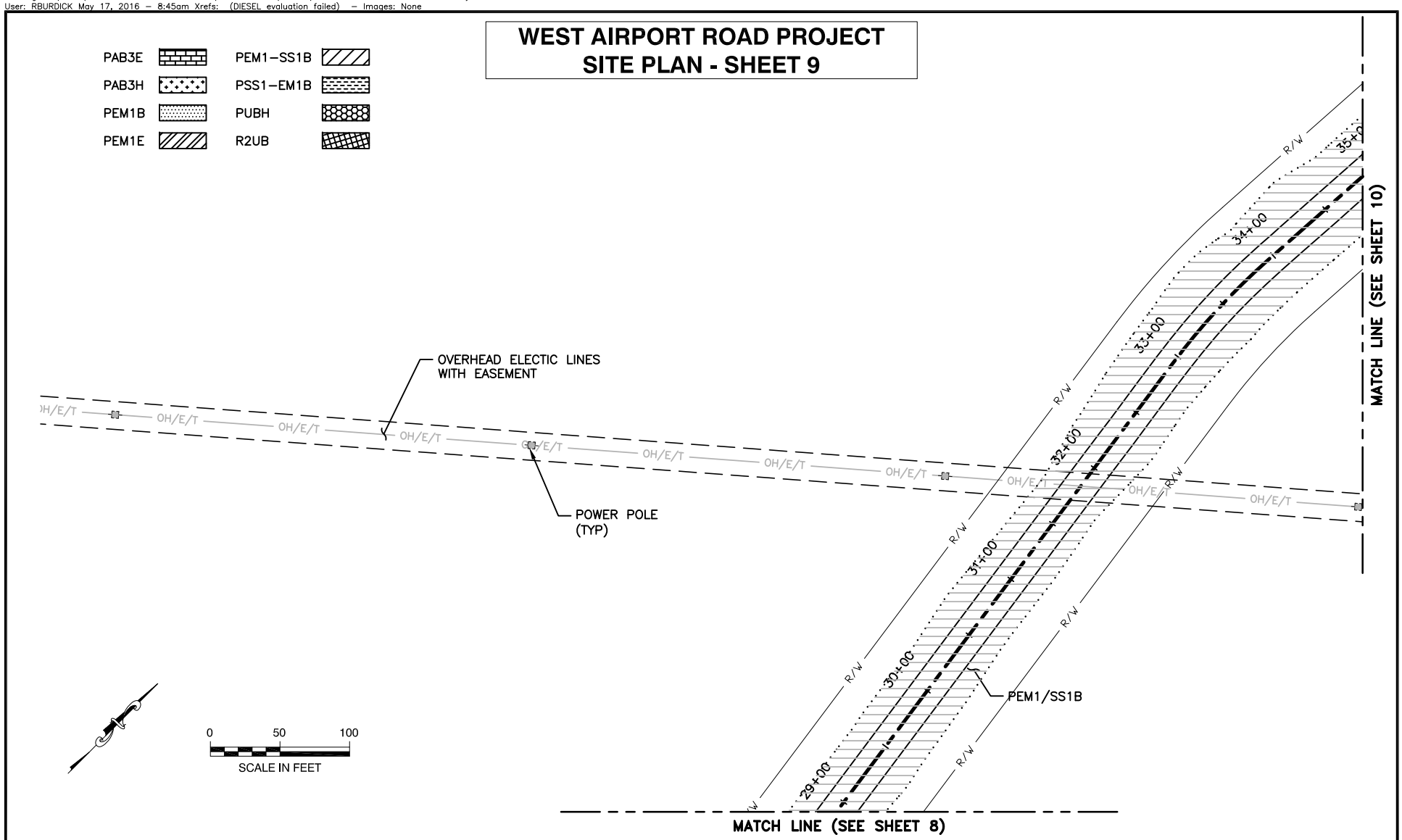

LEGEND

PROPOSED ROAD TOE OF FILL		PROPOSED GUARDRAIL	
PROPOSED ROAD SHOULDER		PROPOSED CMP	
PROPOSED ROAD CENTERLINE		PROPOSED RIGHT OF WAY	R/W
EXISTING RIGHT OF WAY		EXISTING WATER BODY	

Applicant: NATIVE VILLAGE OF DEERING
File No. : POA-2014-121
Waterway: SMITH CREEK
Proposed activity: WEST AIRPORT ROAD CONSTRUCTION
Sec.19 & 30 T. 08 N R. 19 W M. KATEEL RIVER MERIDIAN
Lat.: N 66.08° Long.: 165.71° W
Sheet 9 of 14 Date: 05 /17 /2016

Drawing: K:\JOBS\32140053 WEST AIRPORT RD\ACAD-ENVIRO\USACE\32140053_FIG6-12_COE.DWG - Layout: FIG10
User: RBURDICK May 17, 2016 - 8:46am Xrefs: (DIESEL evaluation failed) - Images: None

WEST AIRPORT ROAD PROJECT
SITE PLAN - SHEET 10

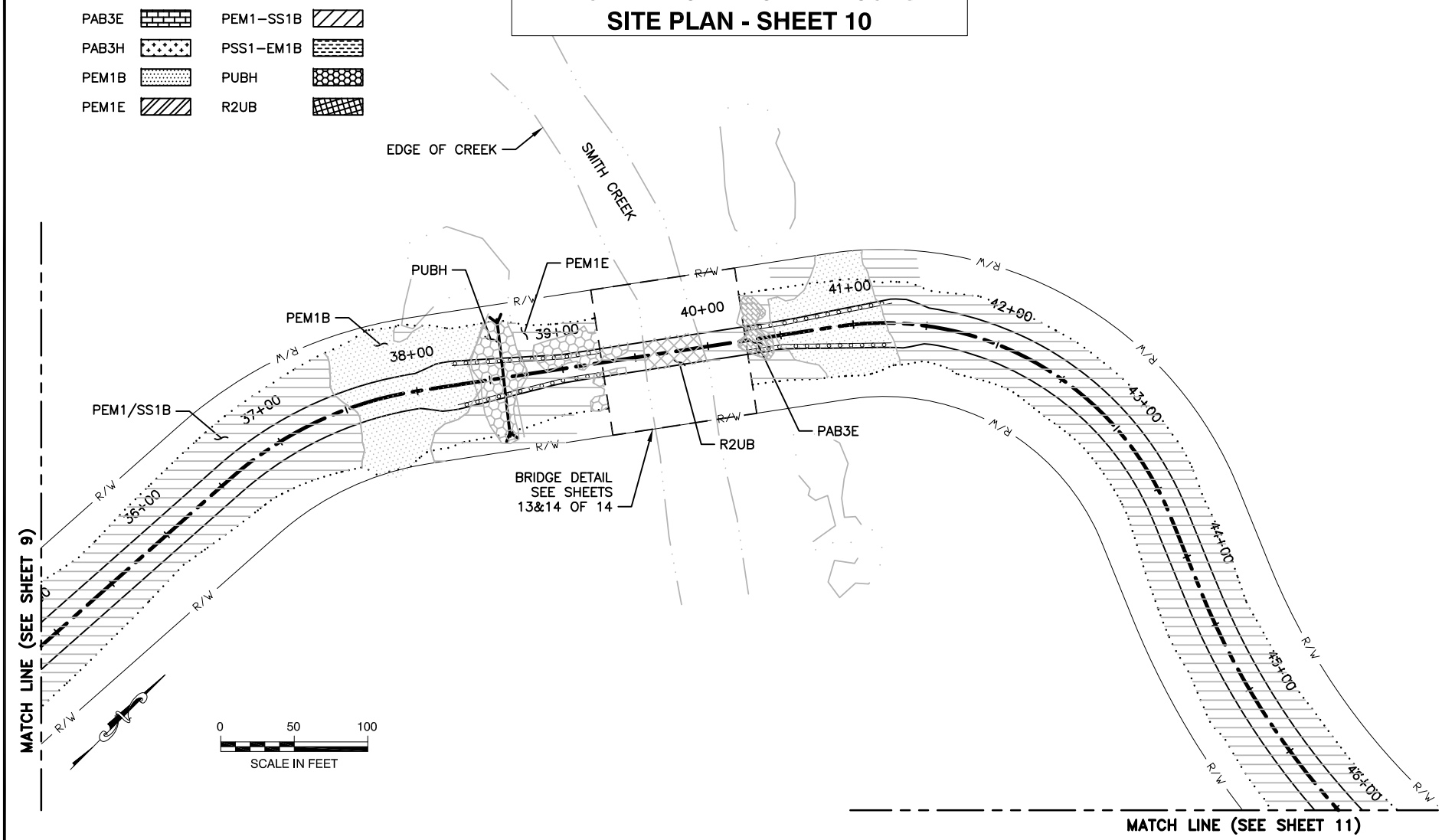

LEGEND

PROPOSED ROAD TOE OF FILL		PROPOSED GUARDRAIL	
PROPOSED ROAD SHOULDER		PROPOSED CMP	
PROPOSED ROAD CENTERLINE		PROPOSED RIGHT OF WAY	R/W
EXISTING RIGHT OF WAY		EXISTING WATER BODY	

Applicant: NATIVE VILLAGE OF DEERING
File No. : POA-2014-121
Waterway: SMITH CREEK
Proposed activity: WEST AIRPORT ROAD CONSTRUCTION
Sec.19 & 30 T. 08 N R. 19 W M. KATEEL RIVER MERIDIAN
Lat.: N 66.08° Long.: 165.71° W
Sheet 10 of 14 Date: 05 /17 /2016

Drawing: K:\JOBS\32140053 WEST AIRPORT RD\ACAD-ENVIRO\USACE\32140053_FIG6-12_COE.DWG - Layout: FIG11
User: RBURDICK May 17, 2016 - 8:46am Xrefs: (DIESEL evaluation failed) - Images: None

WEST AIRPORT ROAD PROJECT
SITE PLAN - SHEET 11

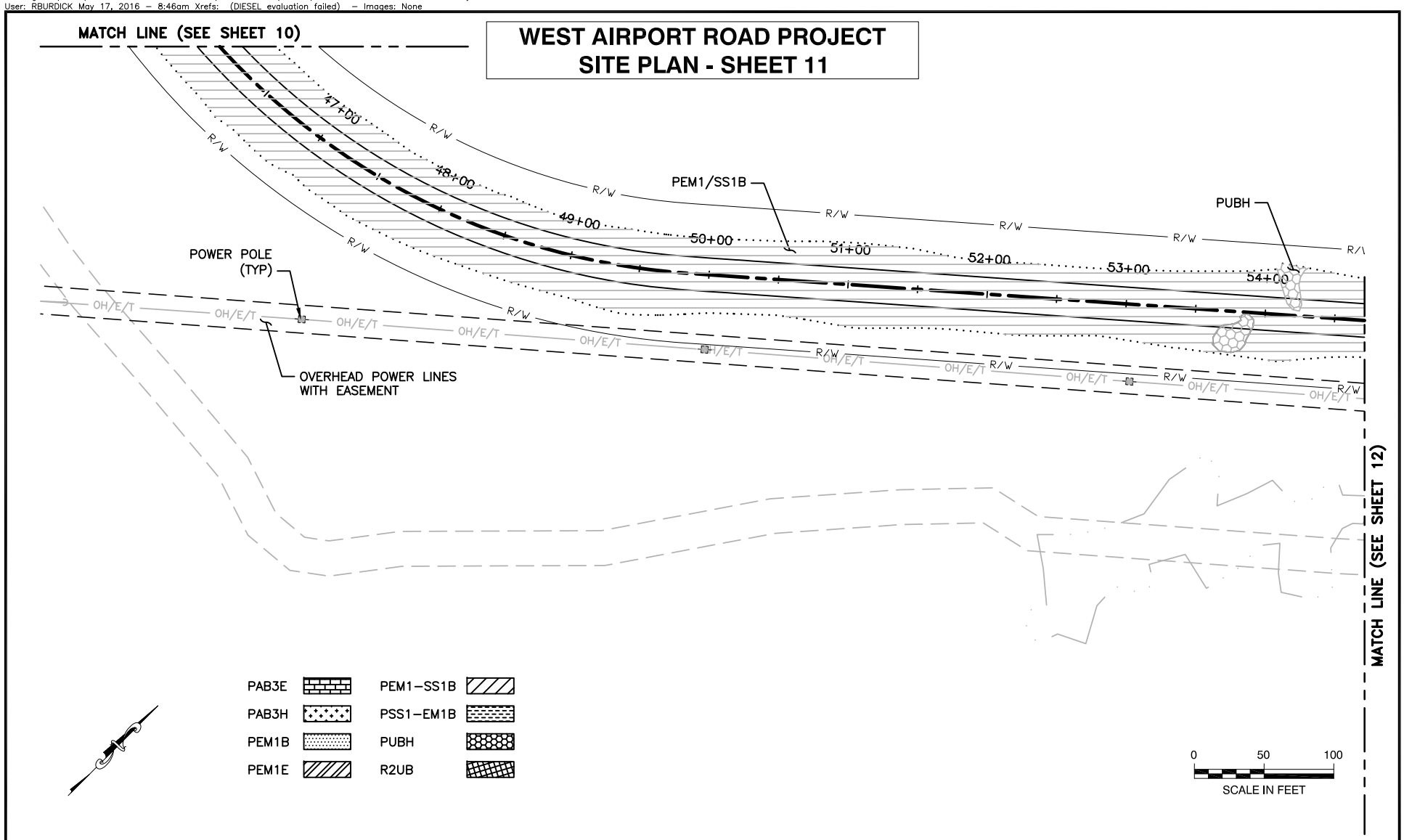

LEGEND

PROPOSED ROAD TOE OF FILL		PROPOSED GUARDRAIL	
PROPOSED ROAD SHOULDER		PROPOSED CMP	
PROPOSED ROAD CENTERLINE		PROPOSED RIGHT OF WAY	R/W
EXISTING RIGHT OF WAY		EXISTING WATER BODY	

Applicant: NATIVE VILLAGE OF DEERING
File No. : POA-2014-121
Waterway: SMITH CREEK
Proposed activity: WEST AIRPORT ROAD CONSTRUCTION
Sec.19 & 30 T. 08 N R. 19 W M. KATEEL RIVER MERIDIAN
Lat.: N 66.08° Long.: 165.71° W
Sheet 11 of 14 Date: 05 /17 /2016

Drawing: K:\JOBS\32140053 WEST AIRPORT RD\ACAD-ENVIRO\USACE\32140053_FIG6-12_COE.DWG - Layout: FIG12
User: RBURDICK May 17, 2016 - 8:46am Xrefs: (DIESEL evaluation failed) - Images: None

WEST AIRPORT ROAD PROJECT
SITE PLAN - SHEET 12

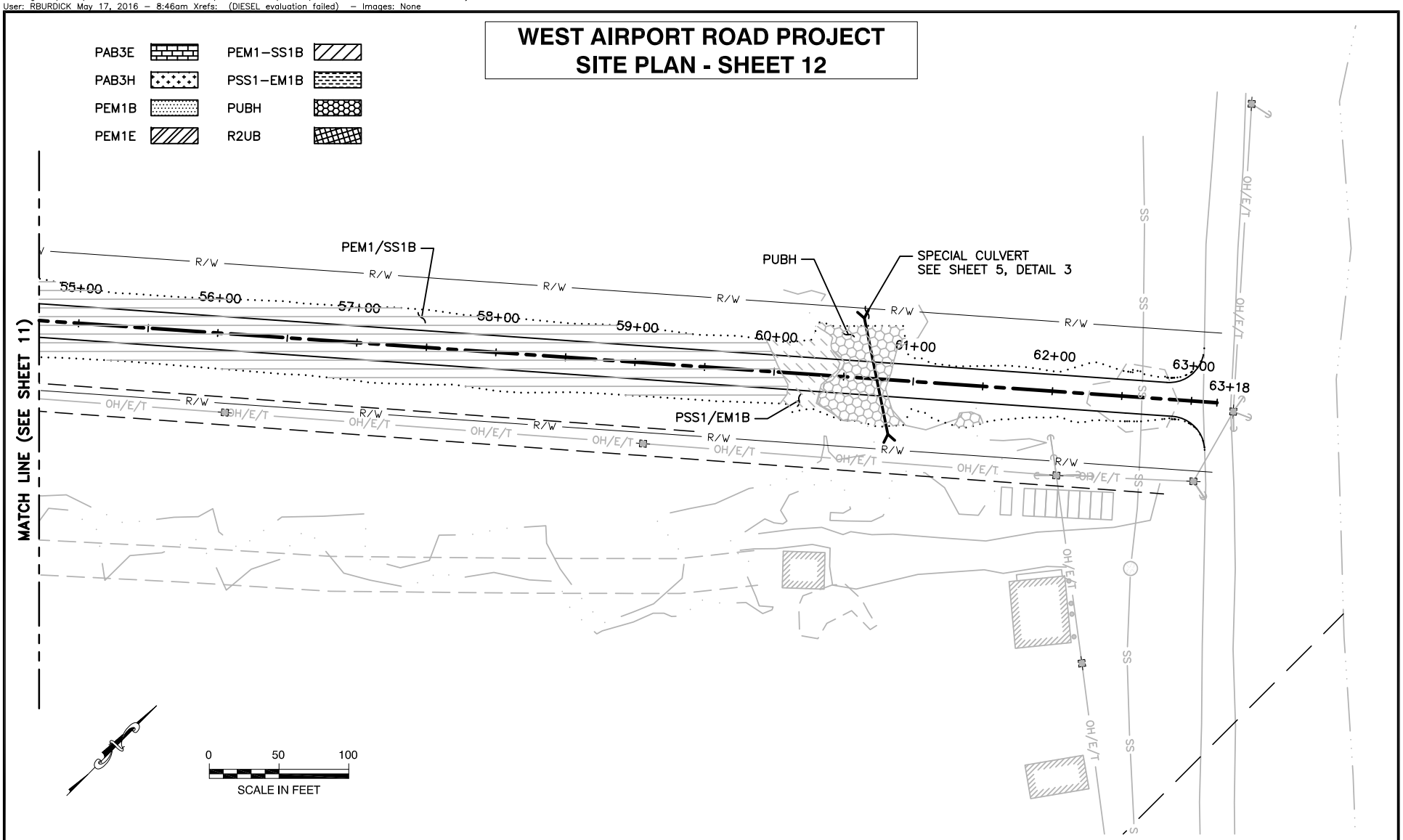

LEGEND

PROPOSED ROAD TOE OF FILL		PROPOSED GUARDRAIL	
PROPOSED ROAD SHOULDER		PROPOSED CMP	
PROPOSED ROAD CENTERLINE		PROPOSED RIGHT OF WAY	R/W
EXISTING RIGHT OF WAY		EXISTING WATER BODY	

Applicant: NATIVE VILLAGE OF DEERING
File No. : POA-2014-121
Waterway: SMITH CREEK
Proposed activity: WEST AIRPORT ROAD CONSTRUCTION
Sec.19 & 30 T. 08 N R. 19 W M. KATEEL RIVER MERIDIAN
Lat.: N 66.08° Long.: 165.71° W
Sheet 12 of 14 Date: 05 /17 /2016

Drawing: K:\JOBS\32140053 WEST AIRPORT RD\ACAD-ENVIRO\USACE\32140053_FIG13_COE.DWG – Layout: FIG13
User: RBURDICK May 17, 2016 – 9:04am Xrefs: (DIESEL evaluation failed) – Images: None

NOTES

1. VEHICULAR BRIDGE FOR PUBLIC USE WILL BE AASHTO-LRFD COMPLIANT.

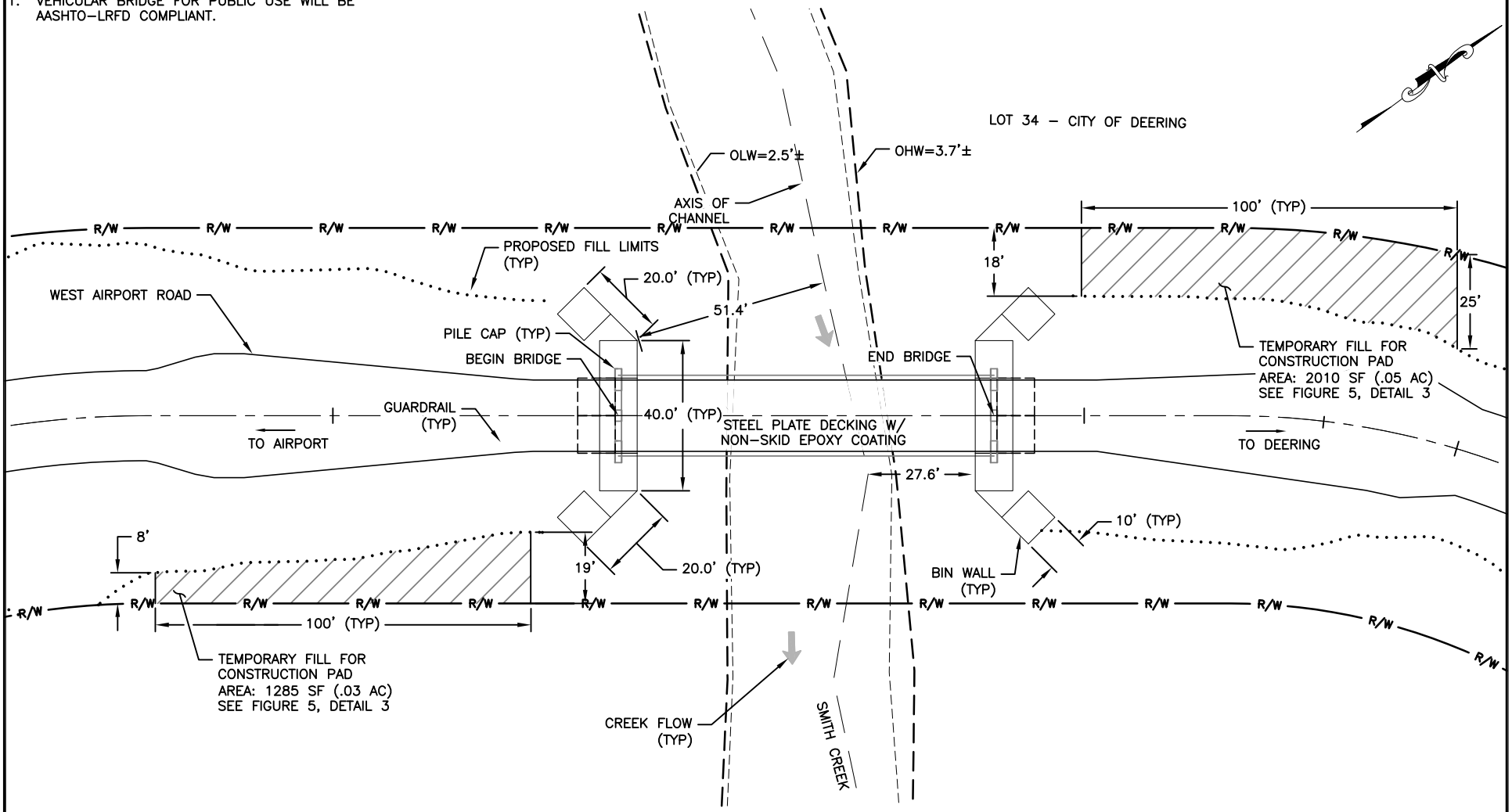

BRIDGE PLAN VIEW

PARCEL OWNER:
NANA REGIONAL COROPORATION INC.

ABBREV:
OHW = ORDINARY HIGH WATER (SEPTEMBER 2013)
OLW = ORDINARY LOW WATER (SEPTEMBER 2013)

NOTES:
NO FILL WILL BE PLACED BELOW OHW.

HORIZONTAL DATUM:
ALASKA STATE PLANE NAD83, ZONE 7, U.S. FEET

VERTICAL DATUM:
NAVD88

Applicant: NATIVE VILLAGE OF DEERING
File No. : POA-2014-121
Waterway: SMITH CREEK
Proposed activity: WEST AIRPORT ROAD CONSTRUCTION
Sec.19 & 30 T. 08 N R. 19 W M. KATEEL RIVER MERIDIAN
Lat.: N 66.08° Long.: 165.71° W
Sheet 13 of 14 Date: 05 /17 /2016

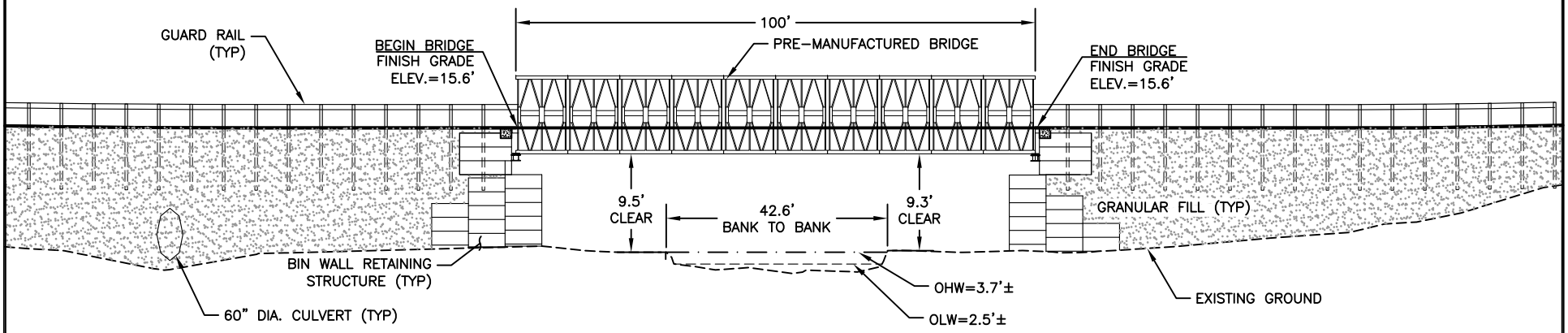

BRIDGE ELEVATION

AT BRIDGE ℄

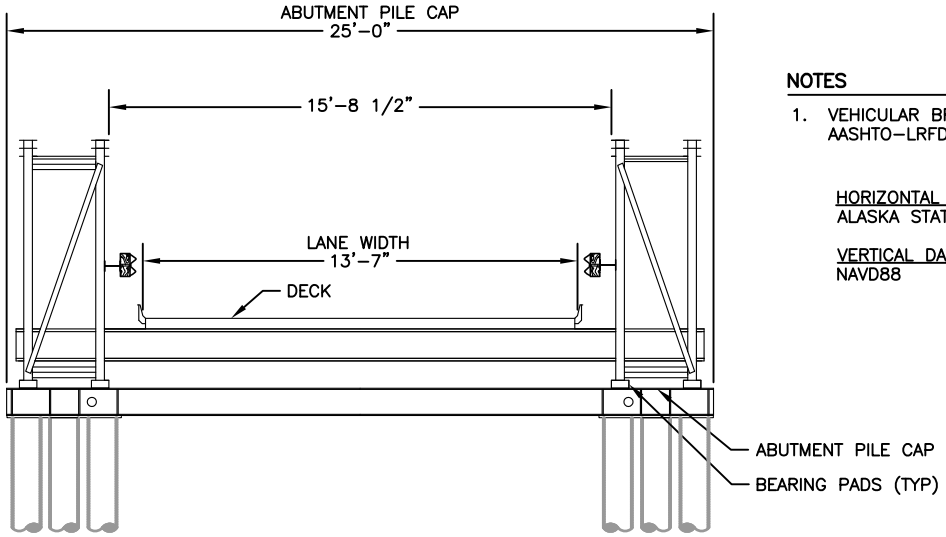

VEHICULAR BRIDGE SECTION

SCALE: NTS

NOTES

1. VEHICULAR BRIDGE FOR PUBLIC USE WILL BE AASHTO-LRFD COMPLIANT.

HORIZONTAL DATUM:
ALASKA STATE PLANE NAD83, ZONE 7, U.S. FEET

VERTICAL DATUM:
NAVD88

Applicant: NATIVE VILLAGE OF DEERING
File No. : POA-2014-121
Waterway: SMITH CREEK
Proposed activity: WEST AIRPORT ROAD CONSTRUCTION
Sec.19 & 30 T. 08 N R. 19 W M. KATEEL RIVER MERIDIAN
Lat.: N 66.08° Long.: 165.71° W
Sheet 14 of 14 Date: 05 /17 /2016