7.0 DRAWINGS

NOTE:

1. ALL AC PAVEMENT ALONG HAUL ROUTES SHALL BE REMOVED AND REPLACED (PER SECTION A, SHEET C5) UPON COMPLETION OF CONSTRUCTION ACTIVITIES. SUBBASE SHALL BE REGRADED PRIOR TO PLACEMENT OF AC PAVEMENT.

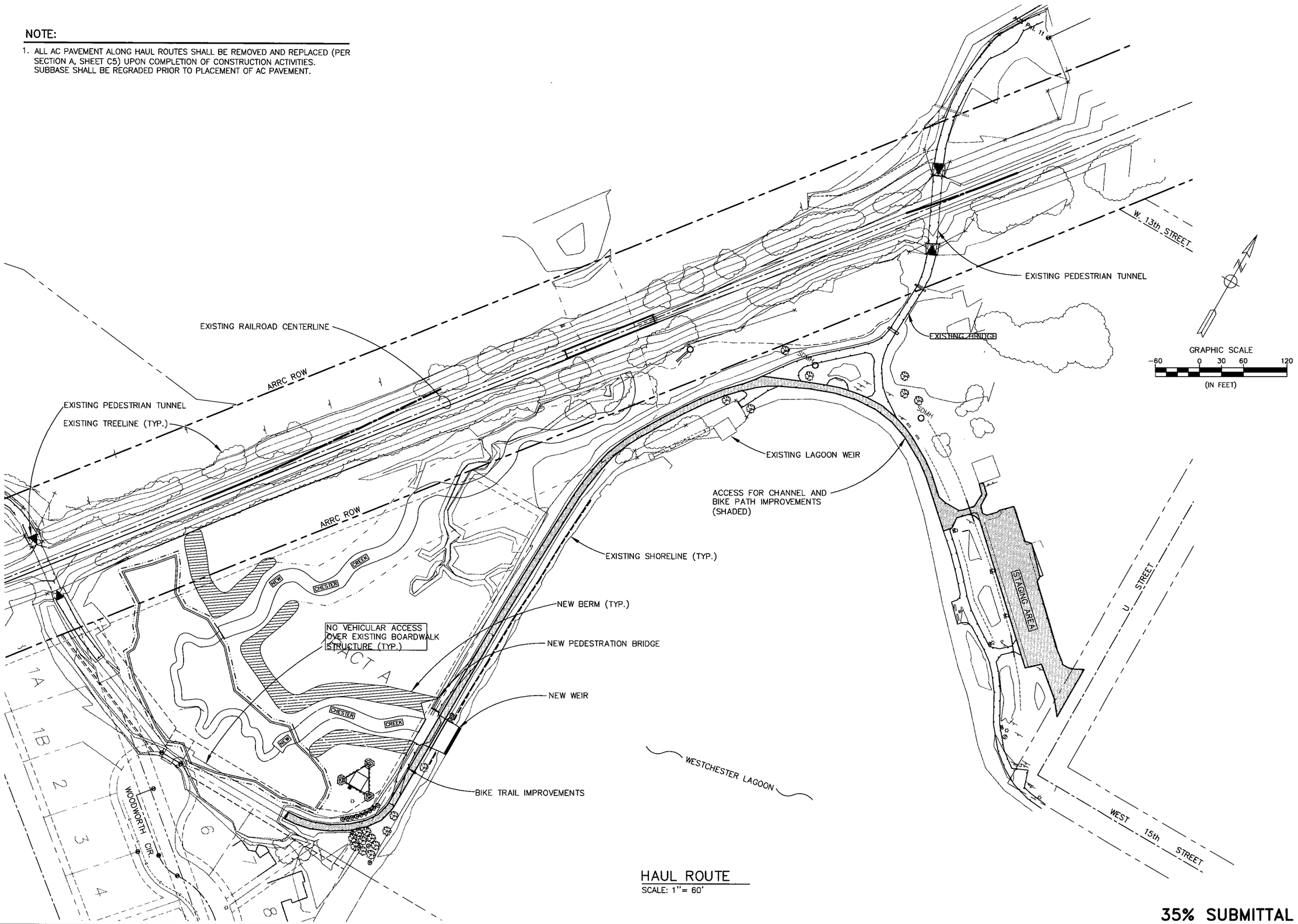

HAUL ROUTE
SCALE: 1"= 60'

35% SUBMITTAL

US ARMY CORPS OF ENGINEERS
ALASKA DISTRICT

CONTRACT NO.
CONTRACTOR
CITY
STATE
Recommended: PRIME CONTRACTOR
Approved: RESIDENT ENGINEER
Date:

Sym.	Action	Description	Date	Appvd

Designed: TKR
Drawn: JDG
Reviewed: –
Chief, –
Submitted: –
Chief, –
Date: 01 AUG 02
Dwg Scale: AS NOTED
Plot Scale: 1:1
Drawing #: XX-XX-XXXX
Branch

U.S. ARMY ENGINEER DISTRICT
CORPS OF ENGINEERS
ANCHORAGE, ALASKA

TRYCK NYMAN HAYES, INC.
911 W. 8TH AVENUE, SUITE 300
ANCHORAGE, AK 99501-3497
TEL (907) 279-0543 FAX (907) 279-7979

ANCHORAGE, ALASKA
CHESTER CREEK AQUATIC ECOSYSTEM RESTORATION
CIVIL
HAUL ROUTE

Reference number:
C1
Sheet – of

XREF's USED FOR THIS DWG:
M:\00143-003\civil\xref-blocks\WCL-Property-Utilities.dwg
M:\00143-003\civil\xref-blocks\INTERFLUVE-30%.dwg
M:\00143-003\civil\xref-blocks\WCL-Basemap.dwg
PLOTTED:
LAYER MGR: HAULROUTE.lay
DRAWING NAME: 00143-003_HAULROUTE.dwg
PROJECT No. & LCTN: M:\00143-003\CIVIL\00143-003_haulroute.DWG
PLOT VIEW: –
DWG FILE: 00143_003_TOWERPLOT SCALE: 1:1
INH JOB NO.: 00143.003
PLOT DATE: –

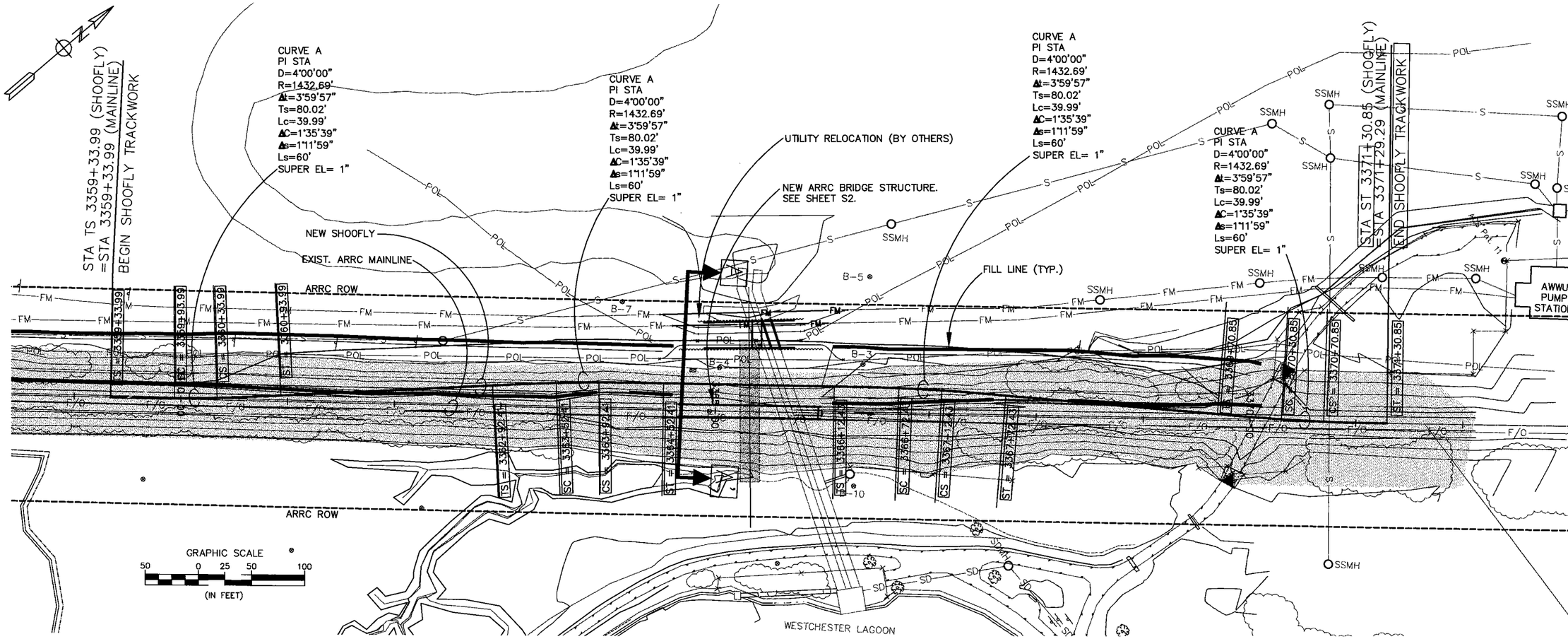

SHOOFLY PLAN

SCALE: 1"=50'

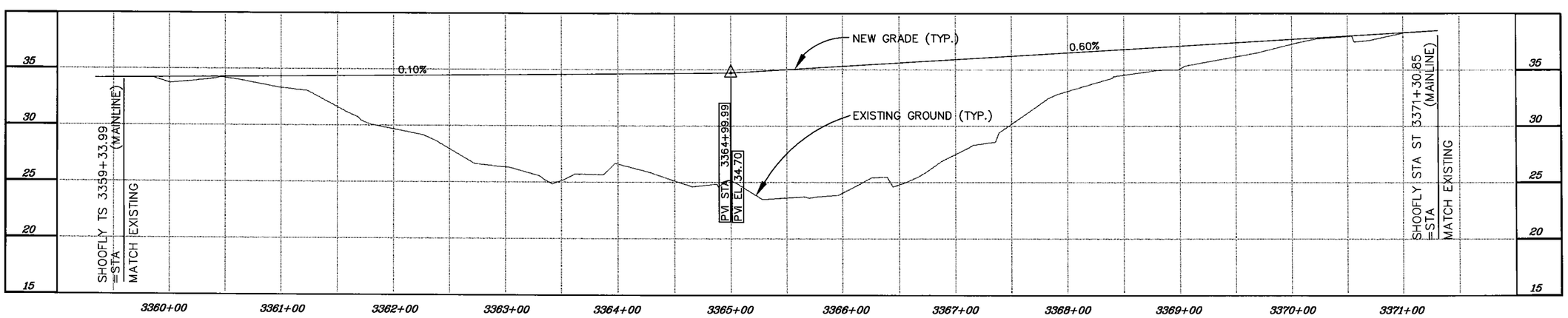

SHOOFLY PROFILE

SCALE: HORIZ. 1"=50'
VERT. 1"=5'

BEFORE YOU DIG CALL FOR FREE UNDERGROUND LOCATION

Locate Call Center of Alaska
Anchorage Area.....278-3121
Statewide.....800-478-3121
who will notify subscribed utilities only.
Other utilities need to be contacted individually.

35% SUBMITTAL

US ARMY CORPS OF ENGINEERS
ALASKA DISTRICT

CONTRACT NO.
CONTRACTOR
CITY
STATE
Recommended:
Approved:
Date:
PRIME CONTRACTOR
RESIDENT ENGINEER

Sym.	Action	Description	Date	Appvd

Date: 01 AUG 02
Dwg Scale: AS NOTED
Plot Scale: 1:1
Section File:
Drawing #: XX-XX-XXXX
Designed: –
Drawn: –
Reviewed: –
Chief, –
Submitted: –
Chief, –

U.S. ARMY ENGINEER DISTRICT
CORPS OF ENGINEERS
ANCHORAGE, ALASKA

TRYCK NYMAN HAYES, INC.
911 W. 8TH AVENUE, SUITE 300
ANCHORAGE, AK 99501-3497
TEL: (907) 276-0543 · FAX: (907) 276-7979

ANCHORAGE, ALASKA
CHESTER CREEK AQUATIC
ECOSYSTEM RESTORATION
CIVIL
SHOOFLY CONSTRUCTION
PLAN & PROFILE

Reference number:
C2
Sheet – of

XREF's USED FOR THIS DWG:
M:\00143-003\civil\xref-blocks\WCL-Property.dwg
M:\00143-003\civil\xref-blocks\Interfluve-30%.dwg
M:\00143-003\civil\xref-blocks\CRW-Utilities.dwg
M:\00143-003\XREF_BLOCK\G_Northern_NEW_UTIL-5-16-02.dwg

PLOTTED:

LAYER MGR: SHOOFLY.lay

DRAWING NAME: 00143-003_SITE.dwg
PROJECT No. & LCTN: M:\00143-003\CIVIL\00143-003_SITE.DWG

PLOT VIEW: –
PLOT SCALE: 1:1

NH JOB NO.: 00143.003
LOT DATE: –
DWG FILE: 00143_003_SITE

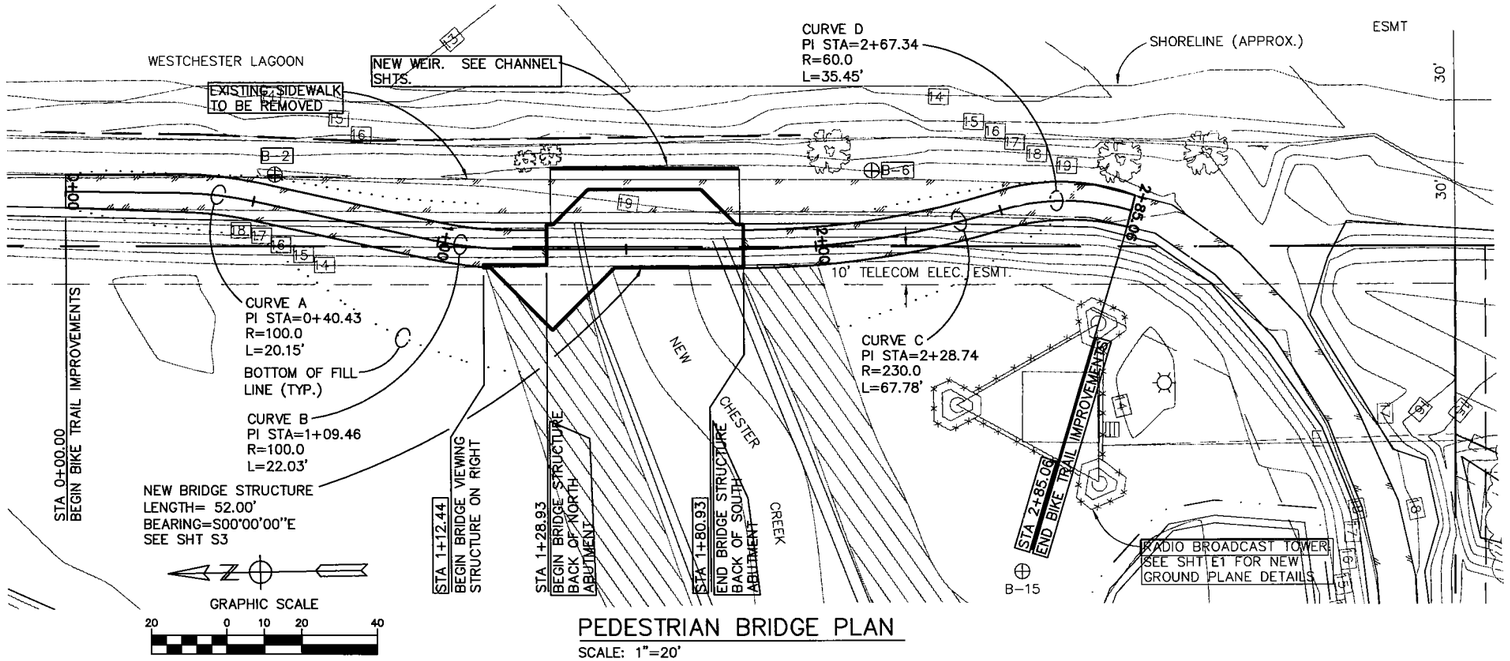

PEDESTRIAN BRIDGE PLAN

SCALE: 1"=20'

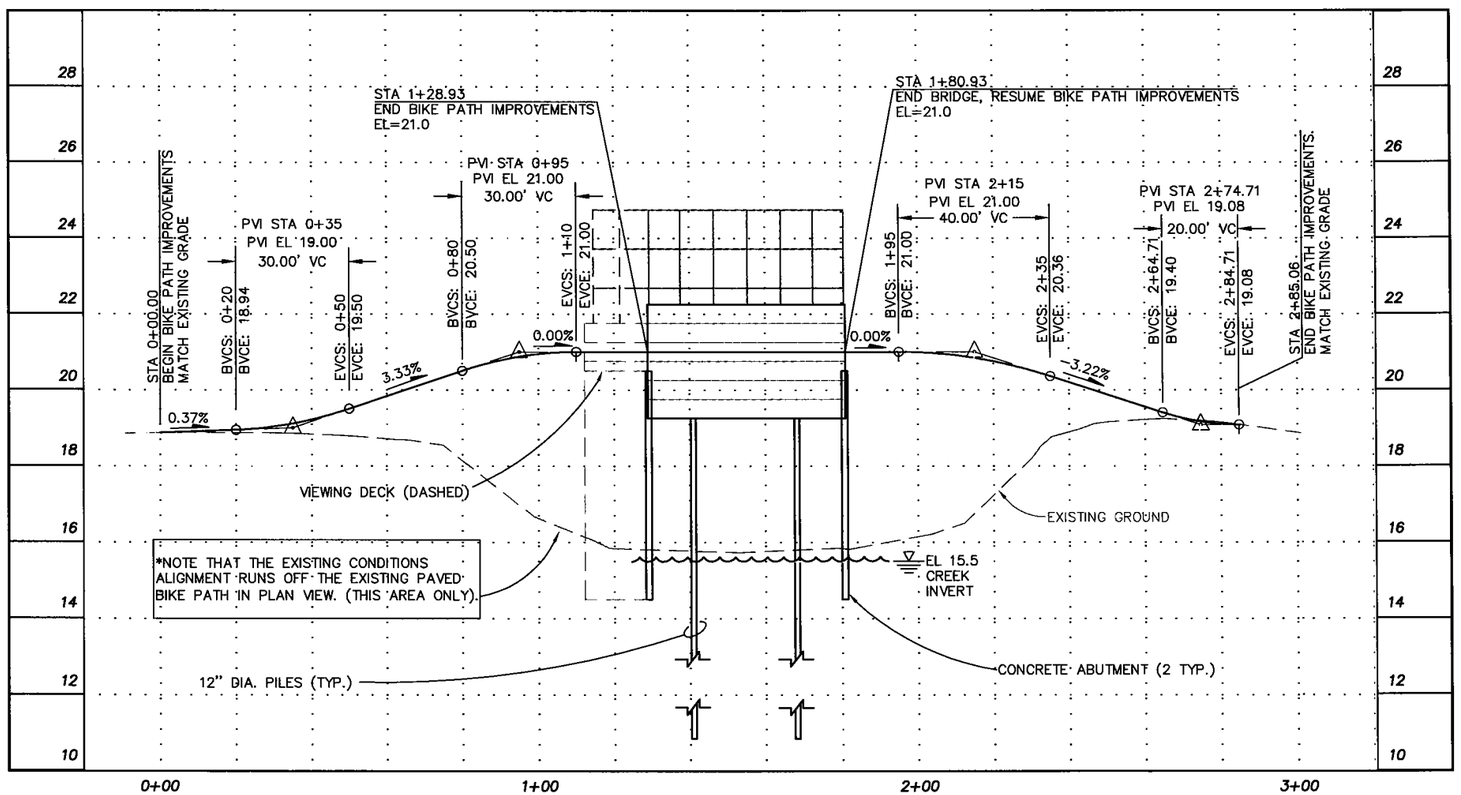

PEDESTRIAN BRIDGE PROFILE

SCALE: HORIZ. 1"=20'
VERT. 1"=2'

BRIDGE DESIGN NOTES

1. BRIDGE DESIGN IS IN ACCORDANCE w/ AASHTO GUIDE SPECIFICATIONS FOR DESIGN OF PEDESTRIAN BRIDGES:
   A. 85 psf LIVE LOAD.
   B. L/500 DEFLECTION.
   C. 10.000 lb. VEHICAL LOAD (8,000 lb. MAX. SINGLE AXLE LOAD).
2. ALL STRUCTURAL STEEL SHALL CONFORM TO ASTM A-36. ALL STEEL AND CONNECTING BOLTS SHALL BE GALVANIZED.
3. ALL DECKING AND TIMBERS SHALL BE DF#1. GLU-LAM BEAMS SHALL BE 24F-V8.
4. ALL DECKING AND GLU-LAM BEAMS SHALL BE TREATED.
5. PILING SHALL BE DRIVED TO AN EMBEDMENT DEPTH OF 35' (MIN.).
6. CONCRETE SHALL HAVE A 28-DAY COMPRESSIVE STRENGTH OF 3000 PSI.

BEFORE YOU DIG CALL FOR FREE UNDERGROUND LOCATION

Locate Call Center of Alaska
Anchorage Area.....278-3121
Statewide.....800-478-3121
who will notify subscribed utilities only. Other utilities need to be contacted individually.

35% SUBMITTAL

US ARMY CORPS OF ENGINEERS
ALASKA DISTRICT

CONTRACT NO. | CONTRACTOR | CITY | STATE
Recommended: | Approved:
PRIME CONTRACTOR | RESIDENT ENGINEER | Date:

Symb.	Action	Description	Date	Appvd

Date: 01 AUG 02
Dwg Scale: AS NOTED
Plot Scale: 1:1
Position File
Drawing #: 00-00-0000
Branch

Designed: –
Drawn: JDG
Reviewed: –
Chief: –
Submitted: –
Chief: –

U.S. ARMY ENGINEER DISTRICT
CORPS OF ENGINEERS
ANCHORAGE, ALASKA

TRYCK NYMAN HAYES, INC.
811 W. 8TH AVE., SUITE 300
ANCHORAGE, ALASKA 99501
TEL: (907) 276-2643 FAX: (907) 276-7978

ANCHORAGE, ALASKA
CHESTER CREEK AQUATIC
ECOSYSTEM RESTORATION
PEDESTRIAN BRIDGE PLAN & PROFILE

Reference number:
C4
Sheet – of

XREF's USED FOR THIS DWG:
M:\00143-003\xref-blocks\WCL-Property_Utilities.dwg
M:\00143-003\xref-blocks\Interflow-305b.dwg
M:\00143-003\xref-blocks\G-Northern_NEW_TTL-5-16-02.dwg

PLOTTED:
DWG FILE: 00143_003_ped-bridge
PLOT DATE: –
PLOT VIEW: –
PLOT SCALE: 1:1
DRAWING NAME: 00143-003_ped-bridge.dwg
PROJECT No. & LCTN: M:\00143-003\STRUCT\00143-003_ped-bridge.dwg
LAYER MGR: civil-bridge.lay
NH JOB NO.: 00143.003

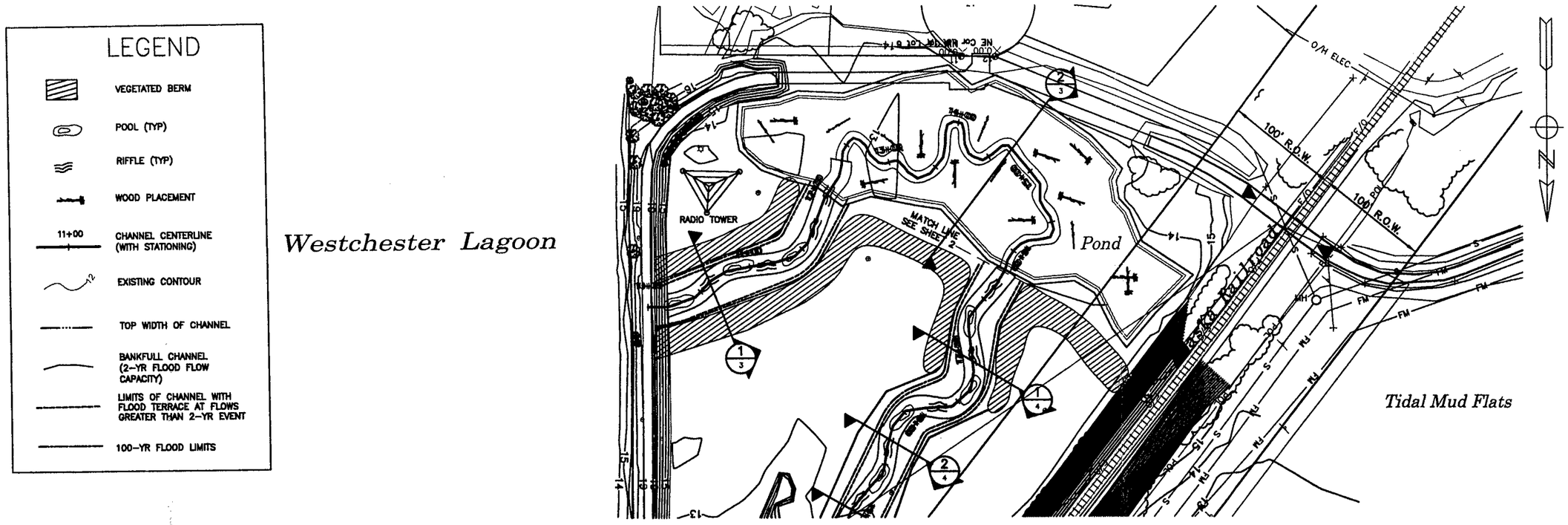

DRAWING NAME: TNH_Sheet1.dwg
PROJECT No. & LCTN: M:\00143-003\fromHDR\30%_subm\TNH_Sheet1.dwg
LAYER MGR: lindaulay
PLOTTED: 06/18/03
XREF's USED FOR THIS DWG: none
PATH:
DATE: 08-24-2001 TIME: 3:00PM PLOT SCALE: 1=1

VERIFY SCALES
BAR IS ONE INCH ON ORIGINAL DRAWING
0 1"
IF NOT ONE INCH ON THIS SHEET, AD JUST

FIELD BOOKS	TBM NO.	LOCATION	ELEV.	DATA	DRAWN BY	CHECKED BY	DATA	DRAWN BY	CHECKED BY	REV	DATE	DESCRIPTION	BY
DESIGN				BASE			TELEPHONE						
				TOPOGRAPHY			ELECTRIC						
STAKING				PROFILE			CABLE TV						
				SANITARY SEWER			DESIGN						
ASBUILT				STORM SEWER			QUANTITIES						
CONTRACTOR	BASIS OF DATUM: MOA, NGS 1972 ADJUSTMENT			WATER			MUN. FINAL CHECK						

STATE OF ALASKA 49TH
XXXXXXX No. CE-XXXX
REGISTERED PROFESSIONAL ENGINEER

inter·fluve, inc.
1020 Wasco Street, Suite I
Hood River, OR 97031
541.386.9003 / Fax 541.386.9241
www.interfluve.com

PM&E

ANCHORAGE ALASKA MUNICIPAL ENGINEERS

CHESTER CREEK AQUATIC HABITAT

DEPARTMENT OF PUBLIC WORKS
OFFICE OF THE MUNICIPAL ENGINEER

CHESTER CREEK AQUATIC HABITAT RESTORATION
WESTCHESTER LAGOON IMPROVEMENTS

CONCEPTUAL CHANNEL PLAN & PROFILE
10+00 - 16+20

SCALE: H: 1" =50' | DATE: NOV. 2001 | GRID: 1428 | SHEET 5

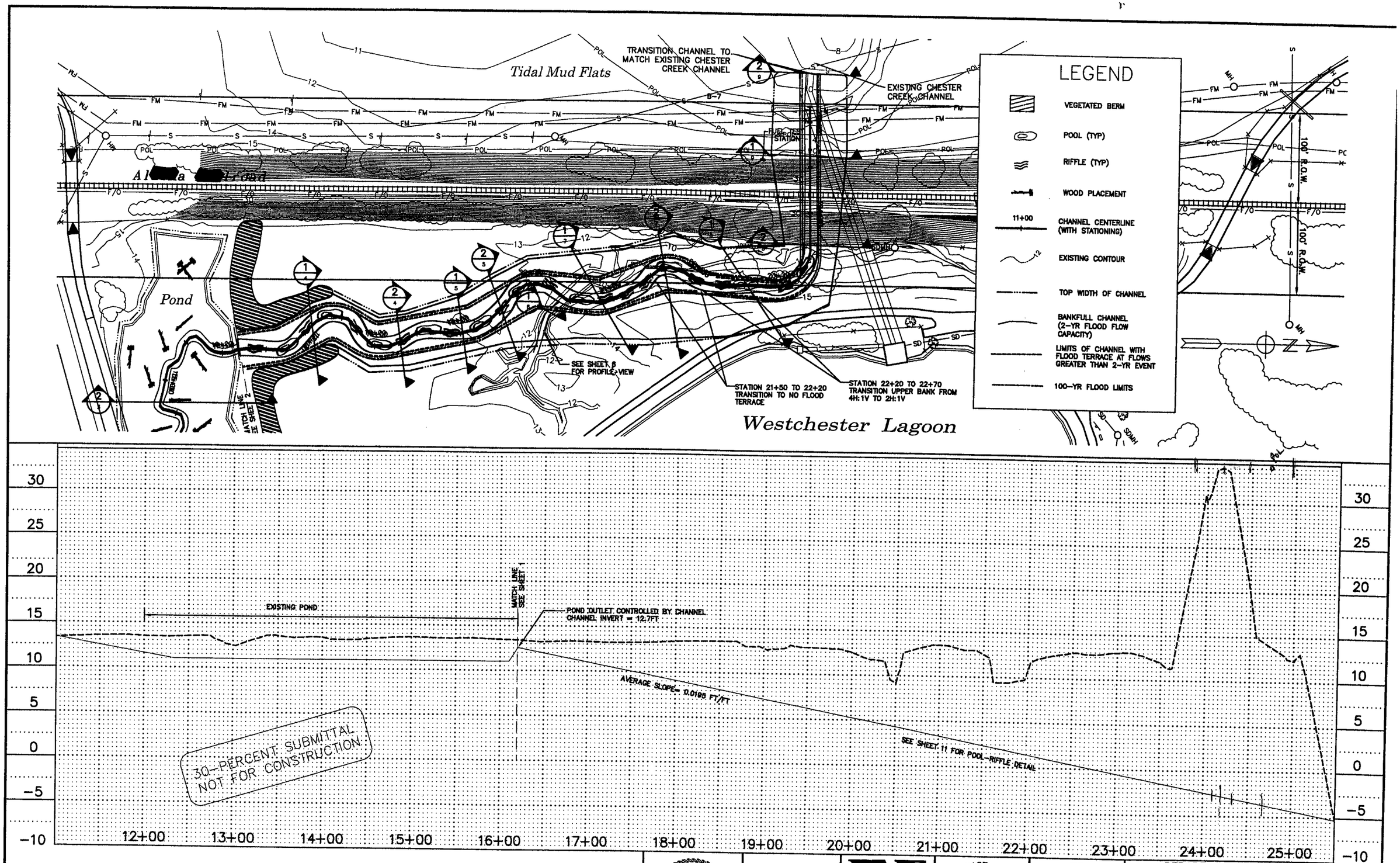

VERIFY SCALES
BAR IS ONE INCH ON ORIGINAL DRAWING
0 1"
IF NOT ONE INCH ON THIS SHEET, ADJUST SCALES ACCORDINGLY

FIELD BOOKS	TBM NO.	LOCATION	ELEV.
DESIGN			
STAKING			
ASBUILT			
CONTRACTOR	BASIS OF DATUM: MOA, NGS 1972 ADJUSTMENT		
INSPECTOR	MOA BM: D 75, EL.= 53.94 FT.		
CONSTRUCTION RECORD	VERTICAL DATUM		

DATA	DRAWN BY	CHECKED BY	DATA	DRAWN BY	CHECKED BY	REV	DATE	DESCRIPTION	BY
BASE			TELEPHONE						
TOPOGRAPHY			ELECTRIC						
PROFILE			CABLE TV						
SANITARY SEWER			DESIGN						
STORM SEWER			QUANTITIES						
WATER			MUN. FINAL CHECK						
GAS									
PLAN CHECK									

STATE OF ALASKA 49TH XXXXXXX No. CE-XXXX REGISTERED PROFESSIONAL ENGINEER

inter·fluve, inc.
1020 Wasco Street, Suite I
Hood River, OR 97031
541.386.9003 / Fax 541.386.9241
www.interfluve.com

PM&E

ANCHORAGE ALASKA MUNICIPAL ANCHORAGE

CHESTER CREEK AQUATIC HABITAT

DEPARTMENT OF PUBLIC WORKS
OFFICE OF THE MUNICIPAL ENGINEER

CHESTER CREEK AQUATIC HABITAT RESTORATION
WESTCHESTER LAGOON IMPROVEMENTS

CONCEPTUAL CHANNEL PLAN & PROFILE
16+20 - 25+53

CADD FILE: WCL-PLN-22X34.DWG PATH: Z:07064-084
XREFS: None
PLOT DATE: 08-24-2001 TIME: 3:00PM PLOT SCALE: 1=1
DRAWING NAME: TNH_Sheet2.dwg LAYER MGR: index.lay
PROJECT No. & LCTN: M:\00143-003\fromHDR\30X_subm\TNH_Sheet2.dwg
PLOTTED: 08/18/03
XREF's USED FOR THIS DWG: none

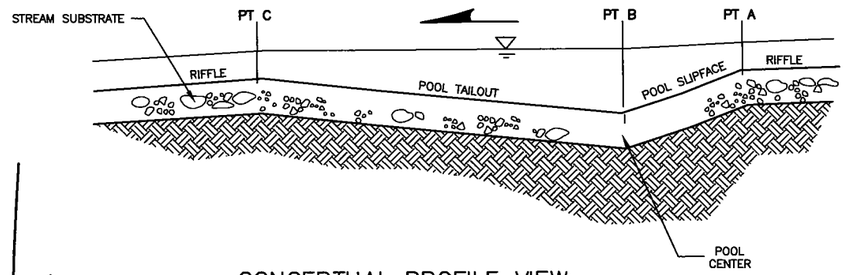

CONCEPTUAL PROFILE VIEW:
POOL AND RIFFLE (2/10)

NOT TO SCALE

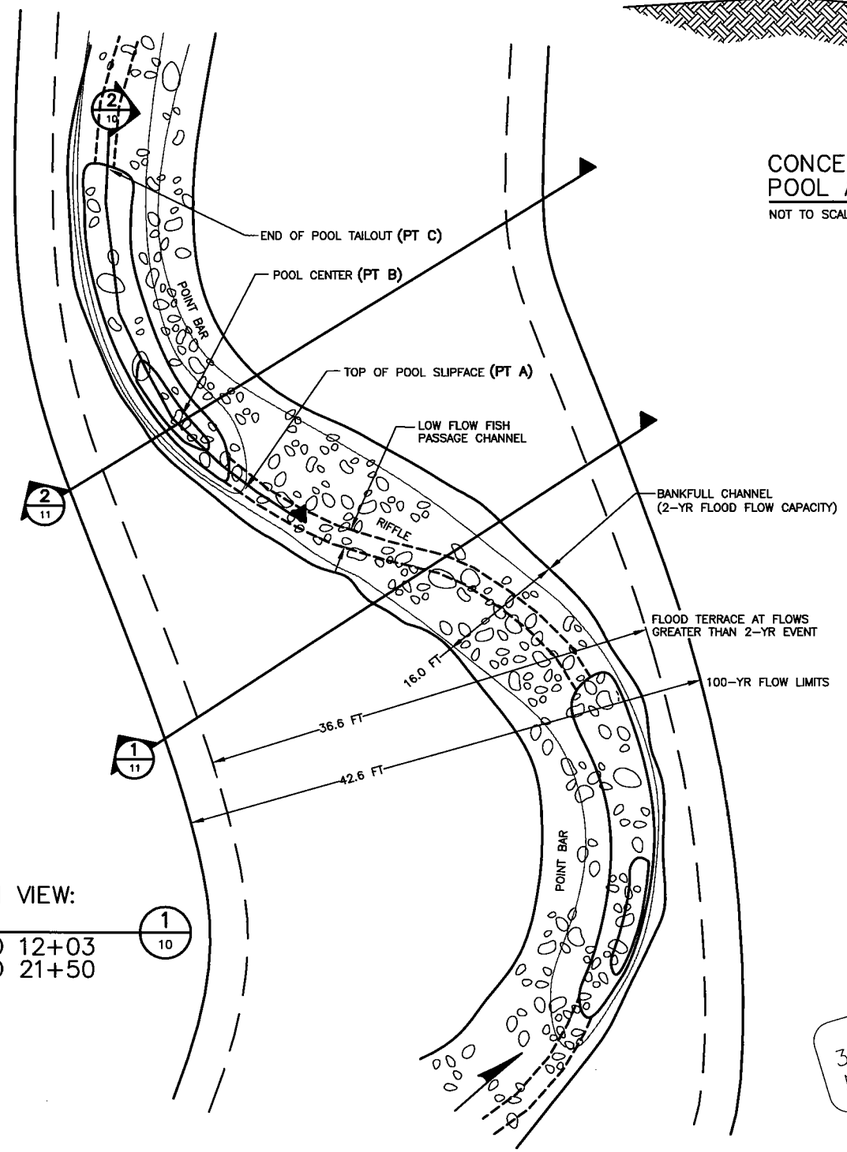

CONCEPTUAL PLAN VIEW:
POOL AND RIFFLE (1/10)

STATION 10+00 TO 12+03
STATION 16+20 TO 21+50

NOT TO SCALE

30-PERCENT SUBMITTAL
NOT FOR CONSTRUCTION

STATION	PROPOSED CHANNEL INVERT ELEVATION	REF. POINT	FEATURE
10+00	15.5	--	D/S FACE OF WEIR
10+30	14.0	B	POOL CENTER
10+46	15.4	C	U/S END OF RIFFLE
10+77	14.0	A	D/S END OF RIFFLE
10+85	12.5	B	POOL CENTER
11+01	13.9	C	U/S END OF RIFFLE
11+32	13.1	A	D/S END OF RIFFLE
11+40	11.6	B	POOL CENTER
11+56	13.0	C	U/S END OF RIFFLE
12+35	11.0	A	D/S END OF RIFFLE
16+10	11.0	--	POND
16+20	12.7	C	POND OUTLET
16+62	11.7	A	D/S END OF RIFFLE
16+70	10.1	B	POOL CENTER
16+86	11.5	C	U/S END OF RIFFLE
17+77	10.3	A	D/S END OF RIFFLE
1745	8.7	B	POOL CENTER
18+01	10.2	C	U/S END OF RIFFLE
17+95	9.3	A	D/S END OF RIFFLE
18+03	7.8	B	POOL CENTER
18+19	9.2	C	U/S END OF RIFFLE
18+52	8.4	A	D/S END OF RIFFLE
18+60	6.8	B	POOL CENTER
18+76	8.3	C	U/S END OF RIFFLE
18+15	7.3	A	D/S END OF RIFFLE
18+23	5.7	B	POOL CENTER
18+39	7.2	C	U/S END OF RIFFLE
19+75	6.3	A	D/S END OF RIFFLE
19+83	4.7	B	POOL CENTER
19+99	6.1	C	U/S END OF RIFFLE
20+52	4.8	A	D/S END OF RIFFLE
20+60	3.3	B	POOL CENTER
20+76	4.7	C	U/S END OF RIFFLE
21+62	2.6	A	D/S END OF RIFFLE
21+70	1.0	B	POOL CENTER
21+86	2.5	C	U/S END OF RIFFLE
22+47	0.9	A	D/S END OF RIFFLE
22+55	-0.6	B	POOL CENTER
22+71	0.8	C	U/S END OF RIFFLE
23+02	0.1	A	D/S END OF RIFFLE
23+10	-1.5	B	POOL CENTER
23+26	-0.1	C	U/S END OF RIFFLE
25+53	-5.5	A	D/S END OF RIFFLE

DETAILED PROFILE TABLE (3/10)

TABLE 1

VERIFY SCALES
BAR IS ONE INCH ON ORIGINAL DRAWING
0 — 1"
IF NOT ONE INCH ON THIS SHEET, ADJUST SCALES ACCORDINGLY

FIELD BOOKS	TBM NO.	LOCATION	ELEV.
DESIGN			
STAKING			
ASBUILT			
CONTRACTOR	BASIS OF DATUM: MOA, NGS 1972 ADJUSTMENT		
INSPECTOR	MOA BM: D 75, EL.= 53.94 Ft.		
CONSTRUCTION RECORD	VERTICAL DATUM		

DATA	DRAWN BY	CHECKED BY	DATA	DRAWN BY	CHECKED BY
BASE			TELEPHONE		
TOPOGRAPHY			ELECTRIC		
PROFILE			CABLE TV		
SANITARY SEWER			DESIGN		
STORM SEWER			QUANTITIES		
WATER			MUN. FINAL CHECK		
GAS					
PLAN CHECK					

REV	DATE	DESCRIPTION	BY
REVISIONS			

STATE OF ALASKA 49TH
XXXXXXX No. CE-XXXX
REGISTERED PROFESSIONAL ENGINEER

inter·fluve, inc.
1020 Wasco Street, Suite I
Hood River, OR 97031
541.386.9003
Fax 541.386.9241
www.interfluve.com

PM&E

ANCHORAGE ALASKA MUNICIPALITY OF ANCHORAGE

CHESTER CREEK AQUATIC HABITAT RESTORATION

DEPARTMENT OF PUBLIC WORKS
OFFICE OF THE MUNICIPAL ENGINEER

CHESTER CREEK AQUATIC HABITAT RESTORATION
WESTCHESTER LAGOON IMPROVEMENTS

CONCEPTUAL DETAILS
POOL & RIFFLE

SCALE: H: 1" = 50' V: 1" = 5'
DATE: OCT. 2001
GRID: 1428
ACCT. NO. XXXXXX
SHEET 14 of 33

CADD FILE: XXXXXXXX
PLOT DATE: 08-24-2001 TIME: 3:00PM
PATH:
PLOT SCALE: 1=1
DRAWING NAME: TNH_Sheet10.dwg
PROJECT No. & LOTN: M:\00143-003\from HDR\30%_subm\TNH_Sheet10.dwg
LAYER MGR: Index.lay
PLOTTED:
XREF's USED FOR THIS DWG: none

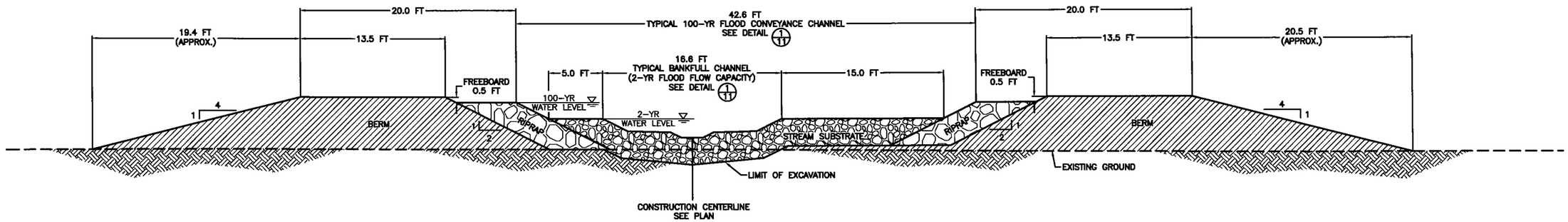

CROSS SECTION 10+50 (1/3)

1" = 5'

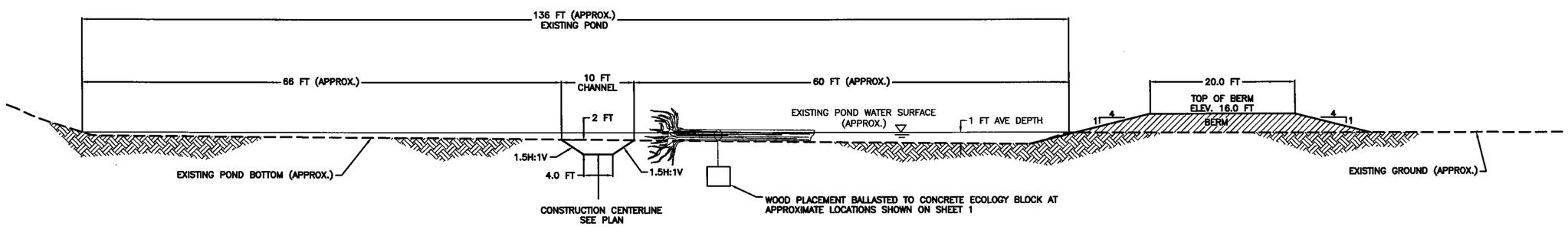

EXISTING POND CROSS SECTION (2/3)

1" = 8'

30-PERCENT SUBMITTAL
NOT FOR CONSTRUCTION

VERIFY SCALES
BAR IS ONE INCH ON ORIGINAL DRAWING
0 1"
IF NOT ONE INCH ON THIS SHEET, ADJUST SCALES ACCORDINGLY

FIELD BOOKS	TBM NO.	LOCATION	ELEV.
DESIGN			
STAKING			
AS BUILT			
CONTRACTOR	BASIS OF DATUM: MOA, NGS 1972 ADJUSTMENT		
INSPECTOR	MOA BM: D 75, EL= 53.94 Ft.		
CONSTRUCTION RECORD	VERTICAL DATUM		

DATA	DRAWN BY	CHECKED BY	DATA	DRAWN BY	CHECKED BY
BASE			TELEPHONE		
TOPOGRAPHY			ELECTRIC		
PROFILE			CABLE TV		
SANITARY SEWER			DESIGN		
STORM SEWER			QUANTITIES		
WATER			MUN. FINAL CHECK		
GAS					
PLAN CHECK					

REV	DATE	DESCRIPTION	BY
REVISIONS			

STATE OF ALASKA 49TH
XXXXXXX
No. CE-XXXX
REGISTERED PROFESSIONAL ENGINEER

inter·fluve, inc.
1020 Wasco Street, Suite I
Hood River, OR 97031
541.386.9003
Fax 541.386.9241
www.interfluve.com

PM&E

ANCHORAGE ALASKA
MUNICIPALITY OF ANCHORAGE

CHESTER CREEK
AQUATIC HABITAT
RESTORATION

DEPARTMENT OF PUBLIC WORKS
OFFICE OF THE MUNICIPAL ENGINEER

CHESTER CREEK AQUATIC HABITAT RESTORATION
WESTCHESTER LAGOON IMPROVEMENTS

CHANNEL & POND CROSS SECTIONS

SCALE: H: AS SHOWN V: AS SHOWN | DATE: NOV. 2001 | GRID: 1428 | ACCT. NO. XXXXXX | SHEET 7 of 33

CADD FILE:
XREFS: None
PLOT DATE: 08-24-2001 TIME: 3:00PM PATH: PLOT SCALE: 1=1 PLOTTED:
DRAWING NAME: TNH_Sheet3.dwg LAYER MGR: Index.lay
PROJECT No. & LCTN: M:\00143-003\from HDR\30%_subm\TNH_Sheet3.dwg
XREF's USED FOR THIS DWG: none

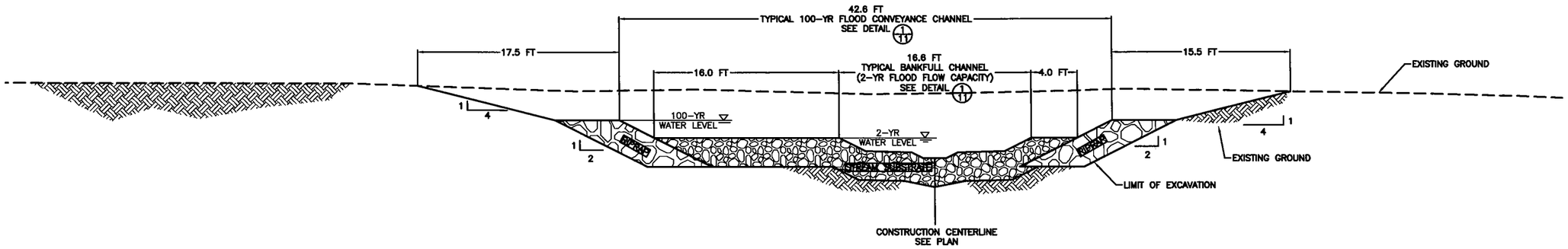

CROSS SECTION 1/5
19+00
1" = 5'

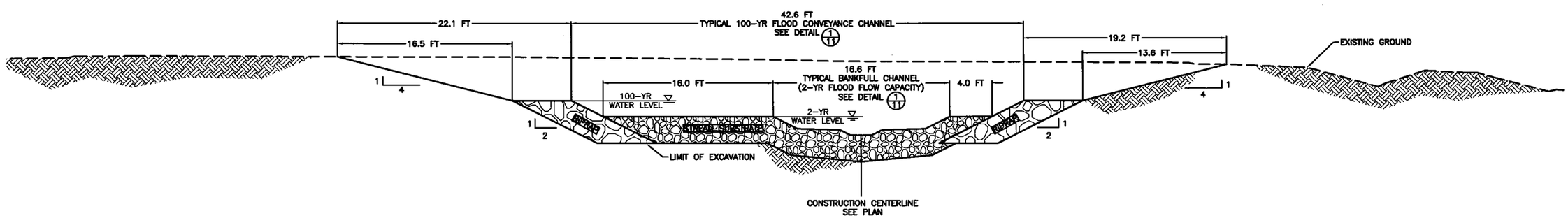

CROSS SECTION 2/5
19+55
1" = 5'

30-PERCENT SUBMITTAL
NOT FOR CONSTRUCTION

VERIFY SCALES
BAR IS ONE INCH ON ORIGINAL DRAWING
0 ▬ 1"
IF NOT ONE INCH ON THIS SHEET, ADJUST SCALES ACCORDINGLY

FIELD BOOKS	TBM NO.	LOCATION	ELEV.
DESIGN			
STAKING			
AS BUILT			
CONTRACTOR	BASIS OF DATUM: MOA, NGS 1972 ADJUSTMENT		
INSPECTOR	MOA BM: D 75, EL.= 53.94 Ft.		
CONSTRUCTION RECORD	VERTICAL DATUM		

DATA	DRAWN BY	CHECKED BY	DATA	DRAWN BY	CHECKED BY
BASE			TELEPHONE		
TOPOGRAPHY			ELECTRIC		
PROFILE			CABLE TV		
SANITARY SEWER			DESIGN		
STORM SEWER			QUANTITIES		
WATER			MUN. FINAL CHECK		
GAS					
PLAN CHECK					

REV	DATE	DESCRIPTION	BY
REVISIONS			

STATE OF ALASKA 49TH
XXXXXXX
No. CE-XXXX
REGISTERED PROFESSIONAL ENGINEER

inter·fluve, inc.
1020 Wasco Street, Suite I
Hood River, OR 97031
541.386.9003
Fax 541.386.9241
www.interfluve.com

PM&E

ANCHORAGE ALASKA
MUNICIPALITY OF ANCHORAGE

CHESTER CREEK AQUATIC HABITAT RESTORATION

DEPARTMENT OF PUBLIC WORKS
OFFICE OF THE MUNICIPAL ENGINEER

CHESTER CREEK AQUATIC HABITAT RESTORATION
WESTCHESTER LAGOON IMPROVEMENTS

CHANNEL CROSS SECTIONS

SCALE: H: 1" = 5' V: 1" = 5'
DATE: NOV. 2001
GRID: 1428
ACCT. NO. XXXXXX
SHEET 9 of 33

DRAWING NAME: TNH_Sheet5.dwg
PROJECT No. & LCTN: M:\00143-003\from\DR\30%_subm\TNH_Sheet5.dwg
LAYER MGR: Index.lay
XREF's USED FOR THIS DWG: none
PLOTTED:
PATH:
PLOT SCALE: 1=1
PLOT DATE: 08-24-2001 TIME: 3:00PM
CADD FILE: Index.lay
XREFS: None

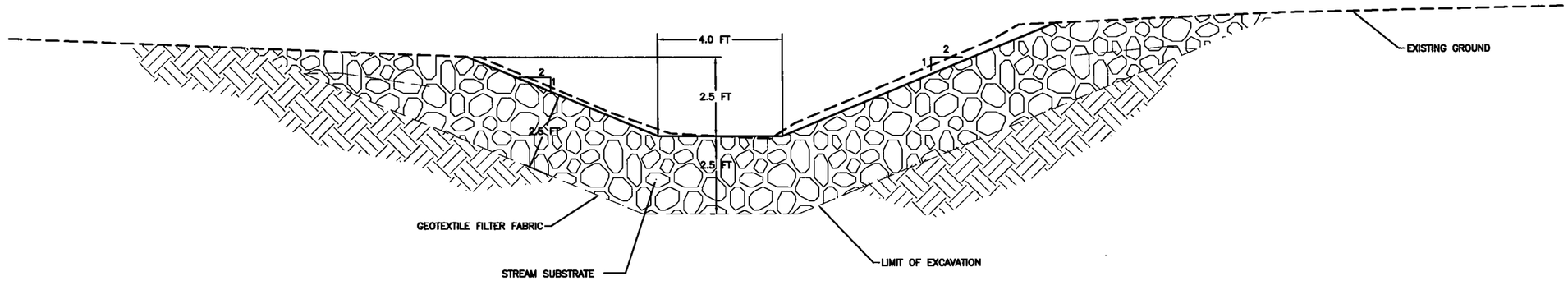

CROSS SECTION 1/6
SLOUGH OUTLET CHANNEL
NOT TO SCALE

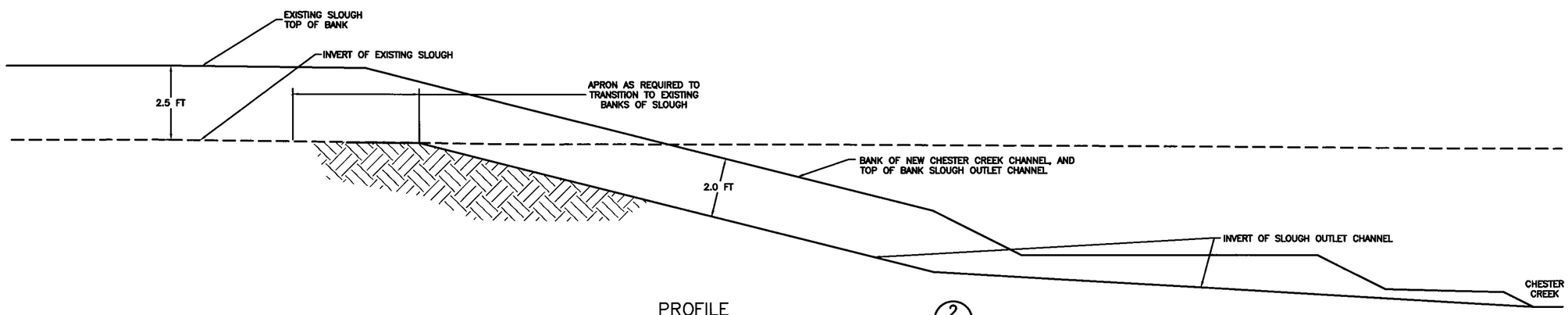

PROFILE 2/5
SLOUGH OUTLET CHANNEL
(APPX STATION 20+00)
NOT TO SCALE

30-PERCENT SUBMITTAL
NOT FOR CONSTRUCTION

XREF's USED FOR THIS DWG: none
PLOTTED:
LAYER MGR: Indexclay
DRAWING NAME: TNH_Sheet6.dwg
PROJECT No. & LCTN: M:\00143-003\from HDR\30%_subm\TNH_Sheet6.dwg
PATH:
PLOT SCALE: 1=1
CADD FILE:
XREFS: None
PLOT DATE: 08-24-2001 TIME: 3:00PM

VERIFY SCALES
BAR IS ONE INCH ON ORIGINAL DRAWING
0 ▬ 1"
IF NOT ONE INCH ON THIS SHEET, ADJUST SCALES ACCORDINGLY

FIELD BOOKS	TBM NO.	LOCATION	ELEV.
DESIGN			
STAKING			
AS BUILT			
CONTRACTOR	BASIS OF DATUM: MOA, NGS 1972 ADJUSTMENT		
INSPECTOR	MOA BM: D 75, EL.= 53.94 FL		
CONSTRUCTION RECORD	VERTICAL DATUM		

DATA	DRAWN BY	CHECKED BY	DATA	DRAWN BY	CHECKED BY
BASE			TELEPHONE		
TOPOGRAPHY			ELECTRIC		
PROFILE			CABLE TV		
SANITARY SEWER			DESIGN		
STORM SEWER			QUANTITIES		
WATER			MUN. FINAL CHECK		
GAS					
PLAN CHECK					

REV	DATE	DESCRIPTION	BY
REVISIONS			

STATE OF ALASKA 49TH XXXXXXX No. CE-XXXX REGISTERED PROFESSIONAL ENGINEER

inter·fluve, inc.
1020 Wasco Street, Suite I
Hood River, OR 97031
541.386.9003
Fax 541.386.9241
www.interfluve.com

PM&E

ANCHORAGE ALASKA MUNICIPALITY OF ANCHORAGE

CHESTER CREEK AQUATIC HABITAT RESTORATION

DEPARTMENT OF PUBLIC WORKS
OFFICE OF THE MUNICIPAL ENGINEER

CHESTER CREEK AQUATIC HABITAT RESTORATION
WESTCHESTER LAGOON IMPROVEMENTS

SLOUGH OUTLET CHANNEL
SECTION & PROFILE

SCALE: H: 1" = 2' V: 1" = 2'
DATE: NOV. 2001
GRID: 1428
ACCT. NO. XXXXXX
SHEET 10 of 33

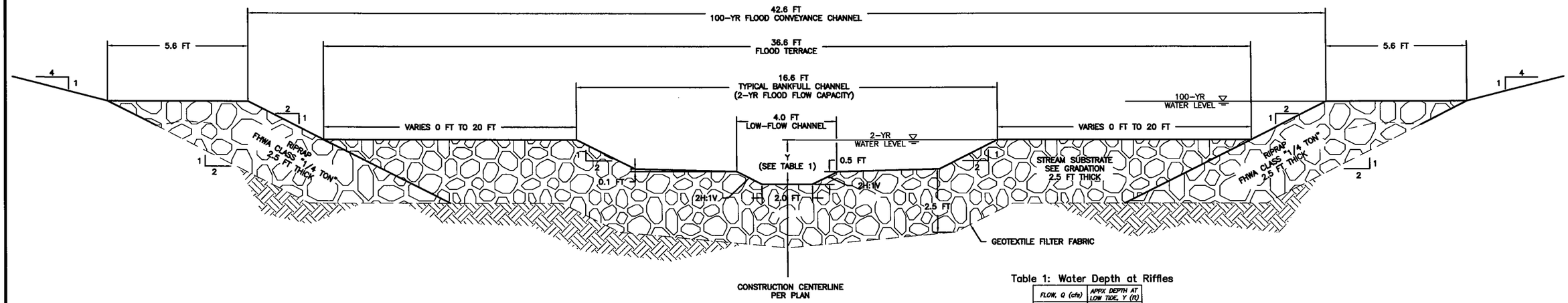

TYPICAL RIFFLE CROSS SECTION (1/11)

NOT TO SCALE

Table 1: Water Depth at Riffles

FLOW, Q (cfs)	APPX DEPTH AT LOW TIDE, Y (ft)
10	0.8
50	1.3
75	1.5
2-yr, 112	1.8
100-yr, 380	2.7

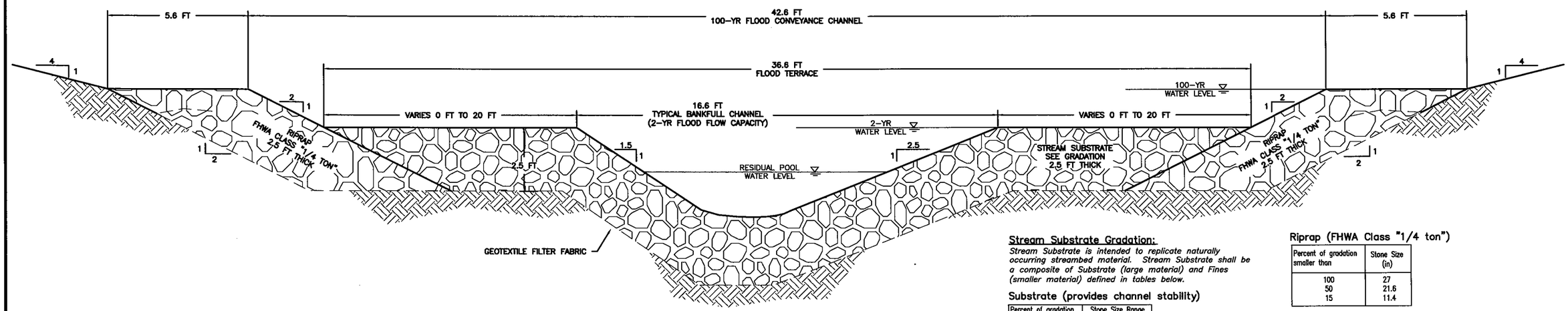

TYPICAL POOL CROSS SECTION (2/11)

NOT TO SCALE

Stream Substrate Gradation:

Stream Substrate is intended to replicate naturally occurring streambed material. Stream Substrate shall be a composite of Substrate (large material) and Fines (smaller material) defined in tables below.

Substrate (provides channel stability)

Percent of gradation smaller than	Stone Size Range in (in)	Stone Size Range max (in)
100	27	31
85	22	25
50	18	21
15	7	11

Fines – (limits subsurface flow)

Percent of gradation smaller than	Stone Size Range min (in)	Stone Size Range max (in)
100	6.00	7.00
85	5.00	6.00
50	4.00	5.00
15	0.25	2.00

Riprap (FHWA Class "1/4 ton")

Percent of gradation smaller than	Stone Size (in)
100	27
50	21.6
15	11.4

Note: Size from preliminary design is approximate to provide channel stability for hydraulic conditions and assumed ice forces.

Size will be specified during final design.

Notes:
- *Substrate and Fines shall be subangular to rounded stone.*
- *Place Substrate in lifts. Work in Fines in each lift by washing with pressure spray to fill all voids of Substrate.*
- *Manual placement with handtools may be required to adequately fill all voids of Substrate with Fines.*
- *Fines shall not inhibit stone to stone contact of Substrate.*
- *Fines are not intended to provide spawning habitat.*

30-PERCENT SUBMITTAL
NOT FOR CONSTRUCTION

VERIFY SCALES
BAR IS ONE INCH ON ORIGINAL DRAWING
0 — 1"
IF NOT ONE INCH ON THIS SHEET, ADJUST SCALES ACCORDINGLY

FIELD BOOKS	TBM NO.	LOCATION	ELEV.
DESIGN			
STAKING			
AS BUILT			
CONTRACTOR	BASIS OF DATUM: MOA, NGS 1972 ADJUSTMENT		
INSPECTOR	MOA BM: D 75, EL.= 53.94 Ft.		
CONSTRUCTION RECORD	VERTICAL DATUM		

DATA	DRAWN BY	CHECKED BY	DATA	DRAWN BY	CHECKED BY
BASE			TELEPHONE		
TOPOGRAPHY			ELECTRIC		
PROFILE			CABLE TV		
SANITARY SEWER			DESIGN		
STORM SEWER			QUANTITIES		
WATER			MUN. FINAL CHECK		
GAS					
PLAN CHECK					

REV	DATE	DESCRIPTION	BY
REVISIONS			

STATE OF ALASKA 49TH REGISTERED PROFESSIONAL ENGINEER XXXXXXX No. CE-XXXX

inter·fluve, inc.
1020 Wasco Street, Suite I
Hood River, OR 97031
541.386.9003
Fax 541.386.9241
www.interfluve.com

PM&E

ANCHORAGE ALASKA MUNICIPALITY OF ANCHORAGE

CHESTER CREEK AQUATIC HABITAT RESTORATION

DEPARTMENT OF PUBLIC WORKS
OFFICE OF THE MUNICIPAL ENGINEER

CHESTER CREEK AQUATIC HABITAT RESTORATION
WESTCHESTER LAGOON IMPROVEMENTS

TYPICAL POOL & RIFFLE CROSS SECTIONS & DETAILS

SCALE: H: 1" = 2' V: 1" = 2' | DATE: NOV. 2001 | GRID: 1428 | ACCT. NO. XXXXXX | SHEET 15 of 33

CADD FILE: Westchester
PLOT DATE: 08-24-2001 TIME: 3:00PM PLOT SCALE: 1=1 PATH:
DRAWING NAME: TNH_Sheet11.dwg LAYER MGR: Index.lay
PROJECT No. & LCTN: M:\00143-003\from!DR\30%_subm\TNH_Sheet11.dwg
PLOTTED: XREF's USED FOR THIS DWG: none

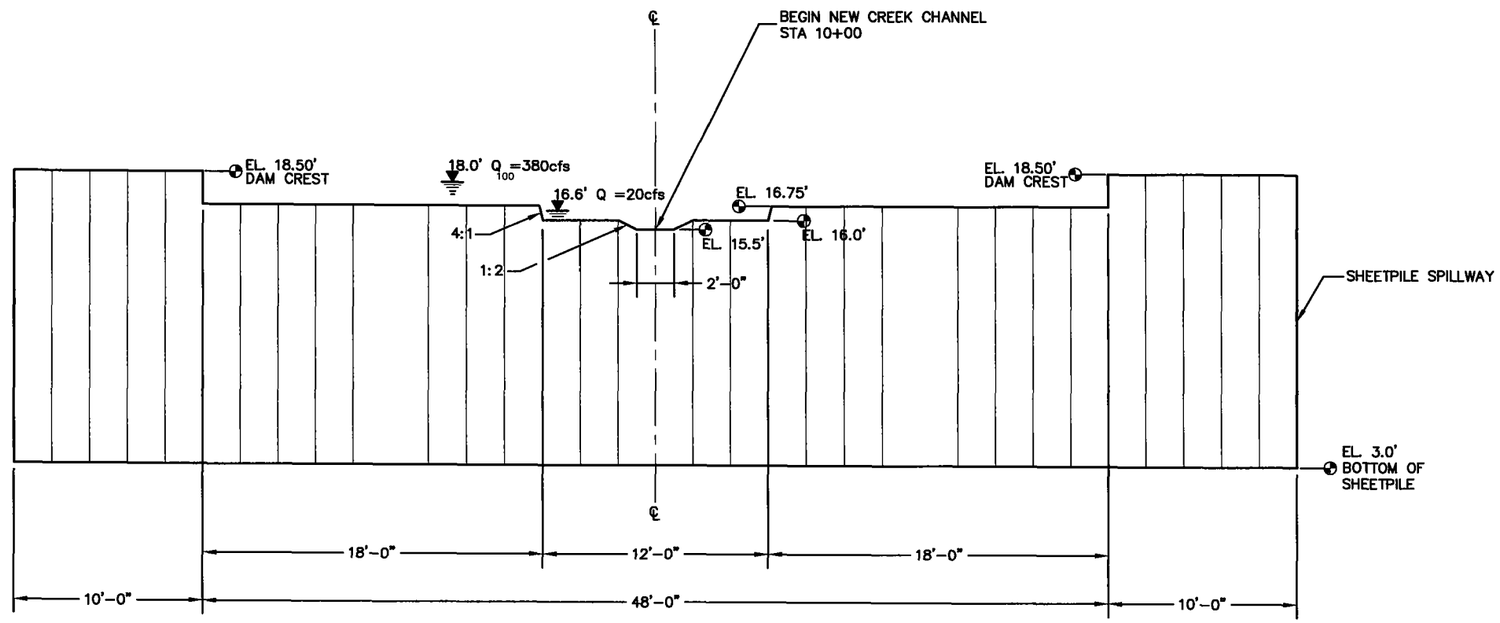

ELEVATION

SPILLWAY PLAN AND ELEVATION

SCALE: 1" = 1'-0"

1

XREF's USED FOR THIS DWG: none

PLOTTED:

LAYER MGR: index.lay

DRAWING NAME: TNH_WCL-Bridge-Wier.dwg

PROJECT No. & LCTN: M:\00143-003\fromHDR\30K_auburn\TNH_WCL-Bridge-Wier.dwg

PATH:

CADD FILE:

XREFS: None

PLOT DATE: 08-24-2001 TIME: 3:00PM

PLOT SCALE: 1=1

VERIFY SCALES
BAR IS ONE INCH ON ORIGINAL DRAWING
0 ▬ 1"
IF NOT ONE INCH ON THIS SHEET, ADJUST SCALES ACCORDINGLY

FIELD BOOKS	TBM NO.	LOCATION	ELEV.
DESIGN			
STAKING			
ASBUILT			
CONTRACTOR	BASIS OF DATUM: MOA, NGS 1972 ADJUSTMENT		
INSPECTOR	MOA BM: D 75, EL.= 53.94 Ft.		
CONSTRUCTION RECORD	VERTICAL DATUM		

DATA	DRAWN BY	CHECKED BY	DATA	DRAWN BY	CHECKED BY
BASE			TELEPHONE		
TOPOGRAPHY			ELECTRIC		
PROFILE			CABLE TV		
SANITARY SEWER			DESIGN		
STORM SEWER			QUANTITIES		
WATER			MUN. FINAL CHECK		
GAS					
PLAN CHECK					

REV	DATE	DESCRIPTION	BY
REVISIONS			

STATE OF ALASKA 49TH
XXXXXXX
No. CE-XXXX
REGISTERED PROFESSIONAL ENGINEER

HDR
HDR Alaska, Inc.

PM&E

ANCHORAGE ALASKA
MUNICIPALITY OF ANCHORAGE

CHESTER CREEK
AQUATIC HABITAT
RESTORATION

DEPARTMENT OF PUBLIC WORKS
OFFICE OF THE MUNICIPAL ENGINEER

CHESTER CREEK AQUATIC HABITAT RESTORATION
WESTCHESTER LAGOON IMPROVEMENTS

SPILLWAY
PLAN AND ELEVATION

SCALE:	H: As Shown V: As Shown	DATE: DEC. 2001	GRID: 1428	SHEET 16 of 33
		ACCT. NO. XXXXXX		

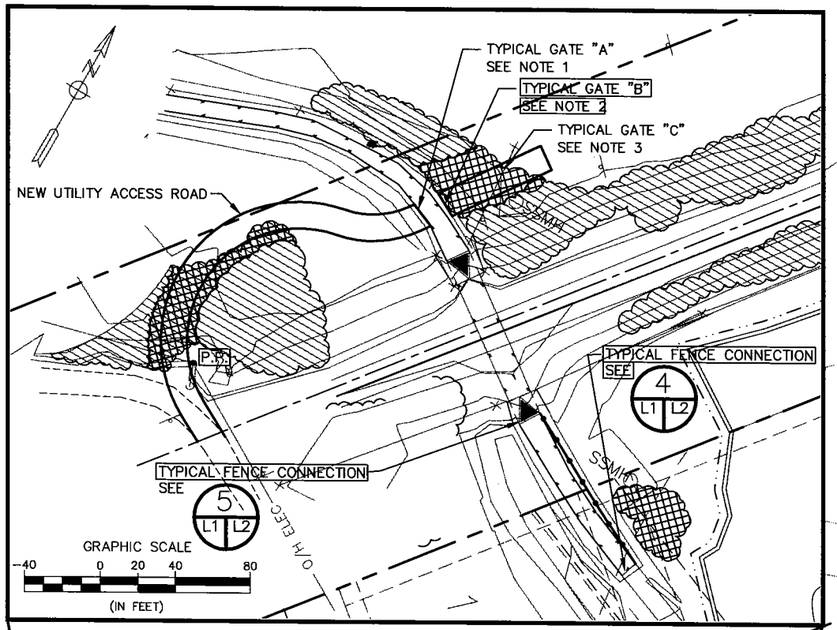

ACCESS ROAD PLAN

VEGETATION LEGEND

= DO NOT DISTURB EXISTING VEGETATION

= REMOVE EXISTING VEGETATION

ACCESS FOR RAILROAD BRIDGE CONSTRUCTION

TYPICAL FENCE CONNECTION
SEE
5
L1 L2

TYPICAL FENCE CONNECTION
SEE
4
L1 L2

ACCESS FOR CHANNEL AND BIKE PATH IMPROVEMENTS

DO NOT DISTURB VEGETATION

STAGING AREA

EXISTING DIRT DRIVEWAY

TYPICAL FENCING
SEE
3
L1 L2

TRACT A

TYPICAL FENCE CONNECTION
SEE
4
L1 L2

WESTCHESTER LAGOON

DO NOT DISTURB EXISTING VEGETATION (TYP.)

RELOCATE EXISTING VEGETATION

REMOVE EXISTING VEGETATION

1A 1B 2 3 4 6 7 8

WOODCHIP CIR.

GRAPHIC SCALE
-60 0 30 60 120
(IN FEET)

VEGETATION PLAN

BEFORE YOU DIG CALL FOR FREE UNDERGROUND LOCATION

Locate Call Center of Alaska
Anchorage Area.....278-3121
Statewide.....800-478-3121
who will notify subscribed utilities only. Other utilities need to be contacted individually.

NOTES:

1. TYPICAL GATE "A" SHALL BE 12' WIDE AND 6' TALL. MATERIAL SHALL CONSIST OF WOOD SLATS AND POSTS AND SHALL BE CONSISTANT WITH EXISTING FENCING.
2. TYPICAL GATE "B" SHALL BE 12' WIDE AND 3'-8" TALL. MATERIAL SHALL CONSIST OF 4" PAINTED TOP RAIL WITH VINYL COATED CHAIN LINK MESH CONNECTED TO WOOD POSTS AND SHALL BE CONSISTANT WITH EXISTING FENCING.
3. TYPICAL GATE "C" SHALL BE 12' WIDE AND 8' TALL. MATERIAL SHALL CONSIST OF CHAIN LINK MESH AND SHALL BE CONSISTANT WITH THE EXISTING FENCE.
4. SEE SHEET L2 , NOTE 5.

35% SUBMITTAL

US ARMY CORPS OF ENGINEERS
ALASKA DISTRICT

CONTRACT NO. _____
CONTRACTOR _____
CITY _____ STATE _____
Recommended: _____ Approved: _____ Date: _____
PRIME CONTRACTOR RESIDENT ENGINEER

Sym.	Action	Description	Date	Appvd

Date: 01 AUG 02
Dwg Scale: AS NOTED
Plot Scale: 1:1
Section: —
Page: —
Drawing #: xx-xx-xxxx
Designed: TKR
Drawn: JDG
Reviewed: —
Chief: —
Submitted: —
Chief: —

U.S. ARMY ENGINEER DISTRICT
CORPS OF ENGINEERS
ANCHORAGE, ALASKA

TRYCK NYMAN HAYES, INC.
911 W. 8TH AVENUE, SUITE 300
ANCHORAGE, ALASKA 99501-3457
TEL: (907) 276-1454 FAX: (907) 276-7979

ANCHORAGE, ALASKA
CHESTER CREEK AQUATIC ECOSYSTEM RESTORATION
VEGETATION PLAN

Reference number:
L1
Sheet — of

XREF's USED FOR THIS DWG:
M:\00143-003\civil\xref-blocks\WCL-Property-Utilities.dwg
M:\00143-003\civil\xref-blocks\INTERFLUVE-30%.dwg
M:\00143-003\civil\xref-blocks\WCL-Basemap.dwg

PLOTTED: — LAYER MGR: TREE_SHT.lay
DRAWING NAME: 00143-003_L1.0.dwg
PROJECT No. & LCTN: M:\00143-003\CIVIL\00143-003_L1.0.dwg
PLOT VIEW: —
DWG FILE: 00143_003_TOWER
PLOT SCALE: 1:1
TNH JOB NO.: 00143.003
PLOT DATE: —

LANDSCAPE NOTES

1. CONTRACTOR TO NOTIFY OWNER OF ANY CONFLICTS.
2. PLANT BED/LAWN AREAS TO BE SEPARATED BY LANDSCAPE EDGING, AS INDICATED ON PLANS.
3. ALL NEW PLANT AREAS TO RECEIVE LANDSCAPE FABRIC BENEATH 3" DEPTH WOODCHIPS.
4. GRADING OF ALL PLANT MATERIAL SHALL COMPLY WITH THE 'AMERICAN STANDARD FOR NURSERY STOCK' ANSI Z60.1 – 1990.
5. CONTRACTOR SHALL FLAG CLEARING LIMITS FOR APPROVAL OF LANDSCAPE ARCHITECT. IF AREAS MARKED ON THE DRAWINGS "RETAIN EXISTING VEGETATION" ARE CLEARED OR DISTURBED DURING CONSTRUCTION, THE CONTRACTOR SHALL REPLACE THE PLANT MATERAIL AT HIS EXPENSE WITH MATERIAL APPROVED BY LANDCAPE ARCHITECT.
6. IF SPECIMEN TREES ARE MARKED ON THE DRAWINGS "DO NOT DISTURB", THE CONTRACTOR SHALL PROTECT THE TREES DURING CONSTRUCTION BY INSTALLING TEMPORARY FENCING OFFSET 5' FROM THE DRIPLINE OF THE TREE.
7. ALL CLEARED AND DISTURBED PLANT MATERIAL IDENTIFIED ON THE PLANS AS "DO NOT DISTURB" AREAS SHALL BE REPLACED AT THE CONTRACTOR'S EXPENSE WITH 2" CALIPER TREES APPROVED BY THE LANDSCAPE ARCHITECT.

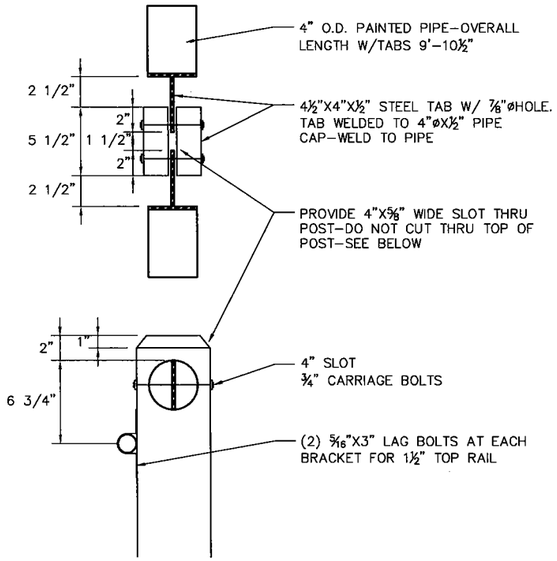

2 FENCE POST AND RAIL CONNECTION
SCALE: N.T.S.

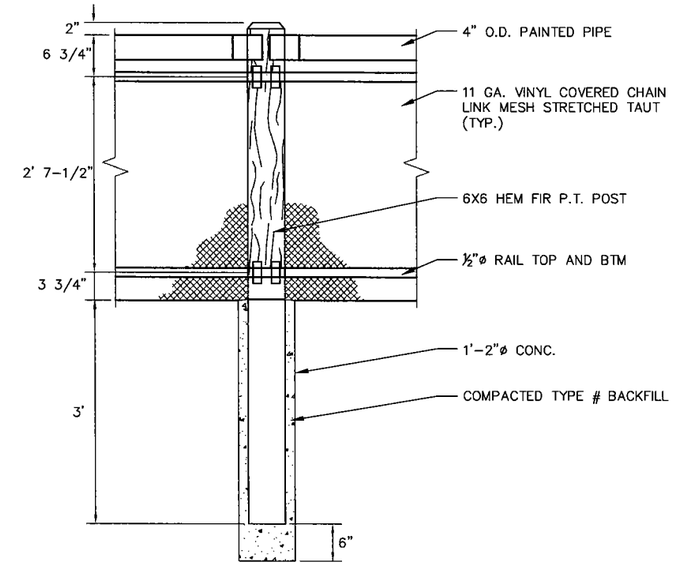

3 TYPICAL FENCE ELEVATION
SCALE: N.T.S.

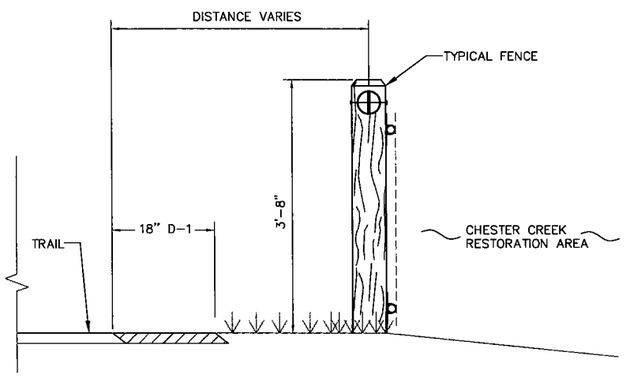

1 TYPICAL FENCE ADJACENT TO TRAIL
SCALE: N.T.S.

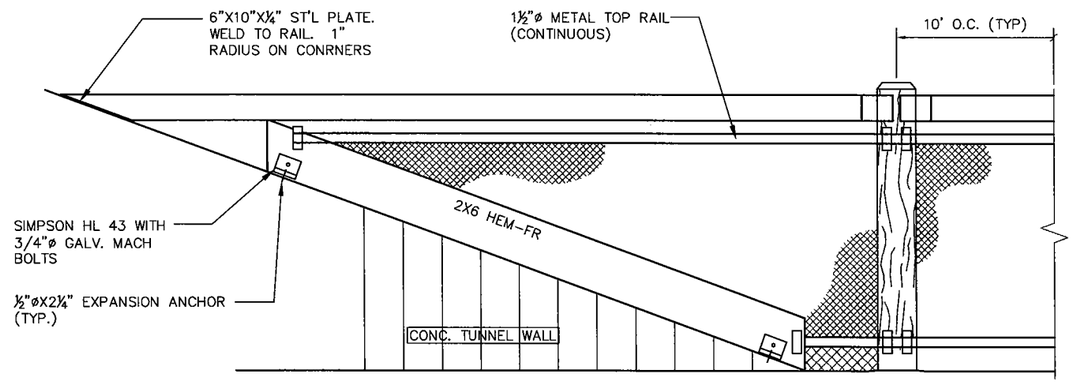

5 TYPICAL FENCE CONNECTION AT TUNNEL
SCALE: N.T.S.

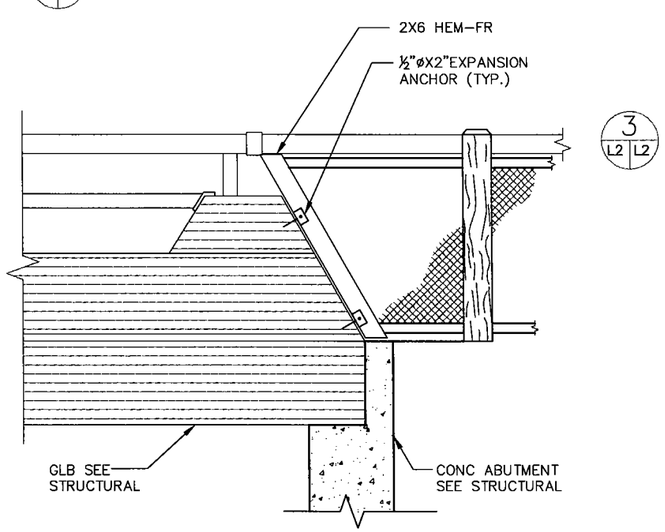

4 TYPICAL FENCE CONNECTION AT BRIDGE
SCALE: N.T.S.

M: \00143–003\Landscape\PHOTO\gate2.bmp

7

M: \00143–003\Landscape\PHOTO\gate.bmp

6 TYPICAL GATE "B"
SCALE: N.T.S.

7 TYPICAL GATE "B" LATCH
SCALE: N.T.S.

35% SUBMITTAL

US ARMY CORPS OF ENGINEERS
ALASKA DISTRICT

CONTRACT NO. _____ CONTRACTOR _____ CITY _____ STATE _____
Recommended: _____ Approved: _____
PRIME CONTRACTOR _____ RESIDENT ENGINEER _____ Date: _____

Sym.	Action	Description	Date	Appvd

Date: 01 AUG 02
Dwg. Scale: AS NOTED
Plot. Scale: 1:1
Plot Date:
File:
Project #: xx-xx-xxx
Drawing #:

Designed: –
Drawn: –
Reviewed: –
Chief, Submittal: –
Chief:

U.S. ARMY ENGINEER DISTRICT
CORPS OF ENGINEERS
ANCHORAGE, ALASKA

TRYCK NYMAN HAYES, INC.
911 W. 8TH AVENUE, SUITE 300
ANCHORAGE, AK 99501-3497
TEL (907) 258-5044 FAX (907) 279-5688

ANCHORAGE, ALASKA
CHESTER CREEK AQUATIC ECOSYSTEM RESTORATION
LANDSCAPE DETAILS

Reference number:
L2
Sheet – of

XREF's USED FOR THIS DWG:
(IMAGE) M:\00143-003\Landscape\PHOTO\gate2.bmp
(IMAGE) M:\00143-003\Landscape\PHOTO\gate.bmp
PLOTTED:
LAYER MGR: DETAIL.lay
DRAWING NAME: 00143-003_L2.0.dwg
PROJECT No. & LCTN: M:\00143-003\CIVIL\00143-003_L2.0.dwg
PLOT VIEW: –
DWG FILE: 00143-003_L2.0 PLOT SCALE: 1:1
IH JOB NO.: 00143.003
LOT DATE: –

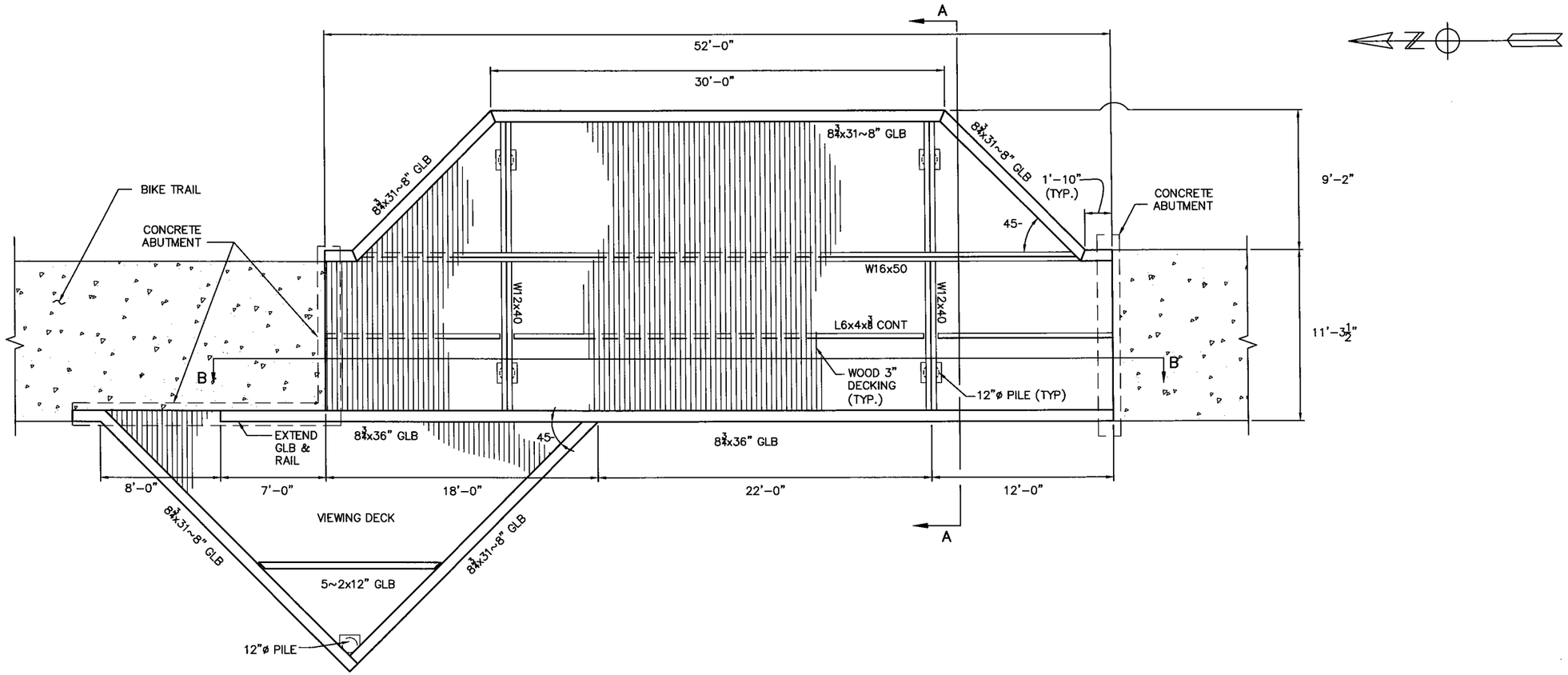

FRAMING PLAN

SCALE: 1/4"=1'-0"

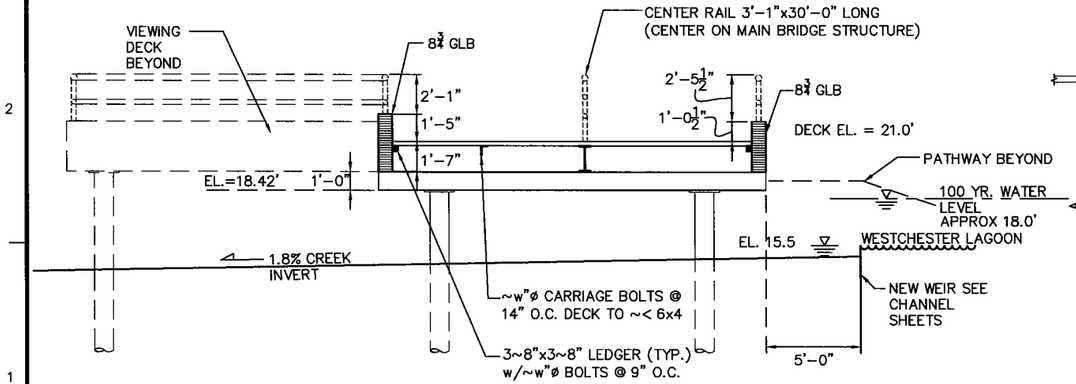

SECTION A–A

SCALE: 1/4"=1'-0"

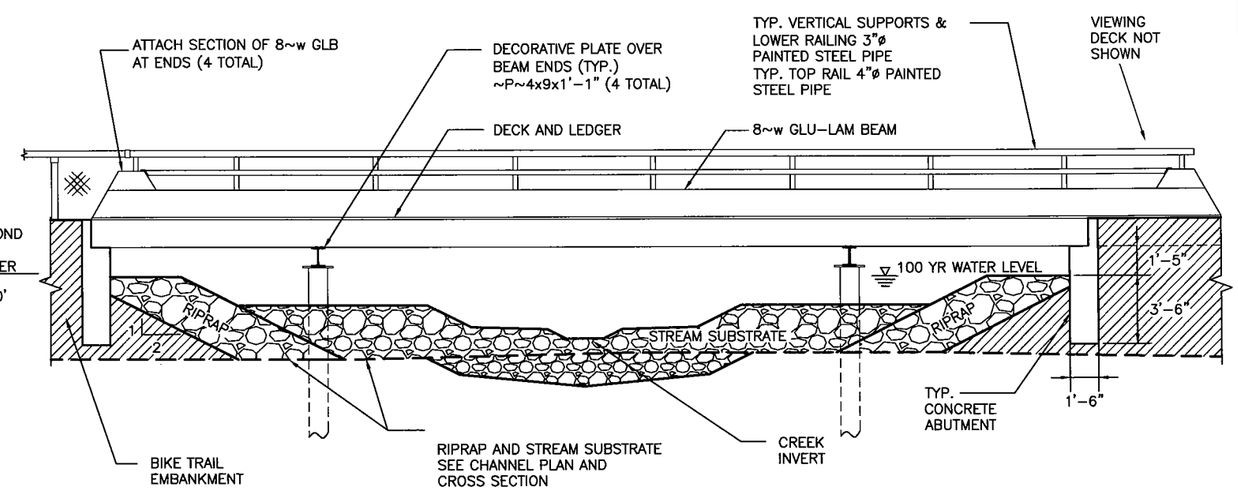

SECTION B–B

SCALE: 1/4"=1'-0"

35% SUBMITTAL

US ARMY CORPS OF ENGINEERS
ALASKA DISTRICT

CONTRACT NO.
CONTRACTOR
CITY
STATE
Recommended: PRIME CONTRACTOR
Approved: RESIDENT ENGINEER
Date:

Sym.	Action	Description	Date	Appvd

Date: 01 AUG 02
Dwg Scale: AS NOTED
Plot Scale: 1:1
Sheet Size: 1
Drawing #: XX-XX-XXXX
Branch

Designed: PC
Drawn: BSB
Reviewed: –
Chief: –
Submitted: –
Chief: –

U.S. ARMY ENGINEER DISTRICT
CORPS OF ENGINEERS
ANCHORAGE, ALASKA

TRYCK NYMAN HAYES, INC.
811 W. 8TH AVENUE, SUITE 300
ANCHORAGE, AK 99501-3497
TEL: (907) 276-0543 FAX: (907) 276-7878

ANCHORAGE, ALASKA
CHESTER CREEK AQUATIC ECOSYSTEM RESTORATION
PEDESTRIAN BRIDGE
STRUCTURAL
FRAMING PLAN

Reference number:
S3
Sheet – of

XREF's USED FOR THIS DWG: NONE
PLOTTED:
LAYER MGR:
DRAWING NAME: 00143-003_PLAN.dwg
PROJECT No. & LCTN: M:\00143-003\STRUCT\00143-003_PLAN.dwg
TNH JOB NO.: 00143.003
PLOT DATE:

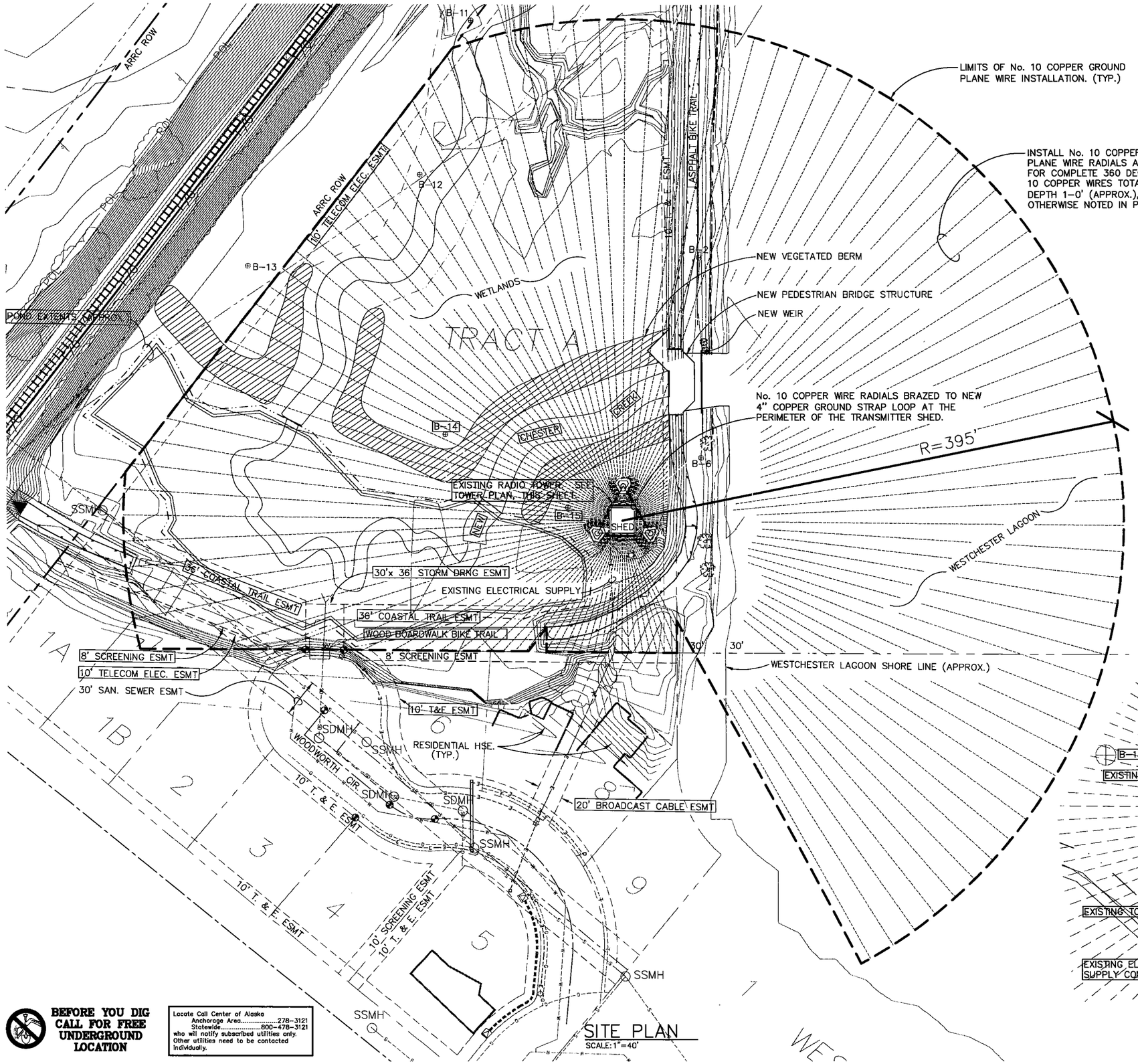

SITE PLAN
SCALE: 1"=40'

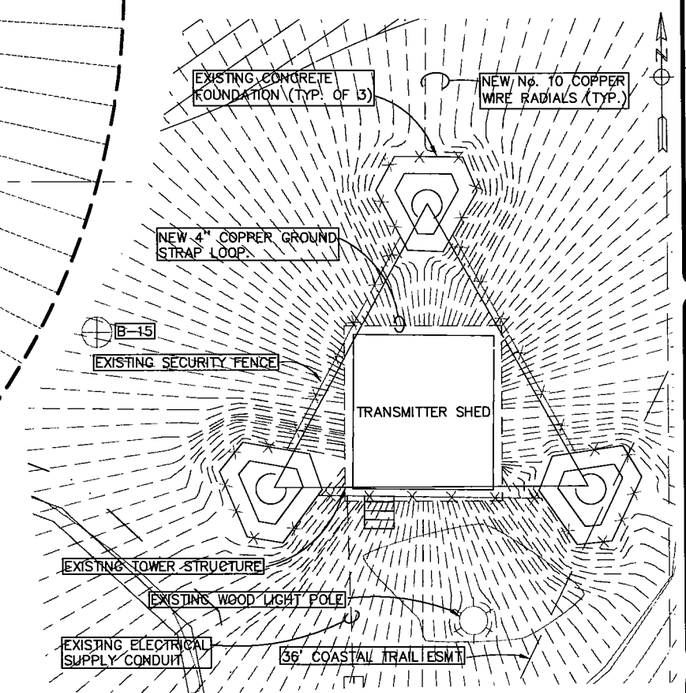

TOWER PLAN
SCALE: 1"=10'

BEFORE YOU DIG CALL FOR FREE UNDERGROUND LOCATION

Locate Call Center of Alaska
Anchorage Area.....278-3121
Statewide.....800-478-3121
who will notify subscribed utilities only. Other utilities need to be contacted individually.

35% SUBMITTAL

US ARMY CORPS OF ENGINEERS
ALASKA DISTRICT

CONTRACT NO.
CONTRACTOR
CITY
STATE
Recommended: PRIME CONTRACTOR
Approved: RESIDENT ENGINEER
Date:

Sym.	Action	Description	Date	Appvd

Date: 01 AUG 02
Dwg Scale: AS NOTED
Plot Scale: 1:1
Section File:
Drawing #: XX-XX-XXXX
Branch:

Designed: TKR
Drawn: JDG
Reviewed: –
Chief: –
Submitted: –
Chief: –

U.S. ARMY ENGINEER DISTRICT
CORPS OF ENGINEERS
ANCHORAGE, ALASKA

TRYCK NYMAN HAYES, INC.
911 W. 8TH AVENUE, SUITE 300
ANCHORAGE, AK 99501-3497
TEL: (907) 279-0843 / FAX: (907) 279-7979

ANCHORAGE, ALASKA
CHESTER CREEK AQUATIC
ECOSYSTEM RESTORATION
BROADCAST TOWER IMPROVEMENTS

Reference number:
E1
Sheet – of

XREF's USED FOR THIS DWG:
M:\00143-003\civil\xref-blocks\WCL-Property.dwg
M:\00143-003\civil\xref-blocks\INTERFLUVE-30%.dwg
M:\00143-003\civil\xref-blocks\CRW-Utilities.dwg
PLOTTED:
LAYER MGR: TOWER.lay
DRAWING NAME: 00143-003_TOWER.dwg
PROJECT No. & LCTN: M:\00143-003\CIVIL\00143-003_TOWER.DWG
PLOT VIEW: –
DWG FILE: 00143_003_TOWERPLOT SCALE: 1:1
JOB NO.: 00143.003
PLOT DATE: –