US Army Corps
of Engineers
Alaska District

Public Notice of Application for Permit

Regulatory Division (1145)
CEPOA-RD
Post Office Box 6898
Elmendorf AFB, Alaska 99506-0898

PUBLIC NOTICE DATE: **01 July 2008**

EXPIRATION DATE: **15 July 2008**

REFERENCE NUMBER: **POA-1987-0277-M1**

WATERWAY: **Sagavanirktok River**

Interested parties are hereby notified that a Department of the Army permit application has been received for work in waters of the United States as described below and shown on the enclosed project drawings.

Comments on the described work, with the reference number, should reach this office no later than the expiration date of this Public Notice to become part of the record and be considered in the decision. Please contact Jim Wolfe at (907) 753-5532, toll free from within Alaska at (800) 478-2712, by fax at (907) 753-5567, or by email at james.wolfe@usace.army.mil if further information is desired concerning this notice.

APPLICANT: BP Exploration (Alaska) Inc., P.O. Box 196612, Anchorage, Alaska 99519-6612.

LOCATION: The project site is located within Section 2, T. 10 N., R. 15 E., Umiat Meridian; USGS Quad Map Beechey Point A-3; Latitude 70.2440º N., Longitude -148.2652º W.; at Vern Lake/Mine Site C Reservoir, in the Prudhoe Bay Unit, North Slope, Alaska.

PURPOSE: The applicant's stated purpose is to allow water withdrawal pipes to be placed in deeper water to accommodate fish screens.

PROPOSED WORK: The applicant is proposing to place approximately 1,500 cubic yards of gravel, concrete blocks and sand bags to extend the existing ramp/pad.

All work would be performed in accordance with the enclosed plan (sheets 1-3), dated June 2008.

WATER QUALITY CERTIFICATION: A permit for the described work will not be issued until a certification or waiver of certification, as required under Section 401 of the Clean Water Act (Public Law 95-217), has been received from the Alaska Department of Environmental Conservation.

COASTAL ZONE MANAGEMENT ACT CERTIFICATION: Section 307(c)(3) of the Coastal Zone, Management Act of 1972, as amended by 16 U.S.C. 1456(c)(3), requires the applicant to certify the described activity affecting land or water uses in the Coastal Zone complies with the Alaska Coastal Management Program. A permit will not be issued until the Division of Coastal and Ocean Management, Department of Natural Resources has concurred with the applicant's certification.

CULTURAL RESOURCES: The latest published version of the Alaska Heritage Resources Survey (AHRS) has been consulted for the presence or absence of historic properties, including those listed in or eligible for inclusion in the National Register of Historic Places. There are no listed or eligible properties in the vicinity of the worksite. Consultation of the AHRS constitutes the extent of cultural resource investigations by the District Commander at this time, and he is otherwise unaware of the presence of such resources. This application is being coordinated with the State Historic Preservation Office (SHPO). Any comments SHPO may have concerning presently unknown archeological or historic data that may be lost or destroyed by work under the requested permit will be considered in our final assessment of the described work.

ENDANGERED SPECIES: The project area is within the known or historic range of the Steller's Eiders (*Polysticta stelleri*), Spectacled Eiders (*Somateria fischeri*), Eskimo Curlew (*Numenius borealis*) and Polar Bear (Ursus maritimus).

Preliminarily, the described activity will not adversely affect threatened Steller's Eiders (*Polysticta stelleri*), Spectacled Eiders (*Somateria fischeri*), and Polar Bear (Ursus maritimus) and will have no affect on the Endangered Eskimo Curlew (*Numenius borealis*), or modify their designated critical habitat, under the Endangered Species Act of 1973 (87 Stat. 844). This application is being coordinated with the U.S. Fish and Wildlife Service and the National Marine Fisheries Service (NMFS). Any comments they may have concerning endangered or threatened wildlife or plants or their critical habitat will be considered in our final assessment of the described work.

ESSENTIAL FISH HABITAT: The Magnuson-Stevens Fishery Conservation and Management Act, as amended by the Sustainable Fisheries Act of 1996, requires all Federal agencies to consult with the NMFS on all actions, or proposed actions, permitted, funded, or undertaken by the agency, that may adversely affect Essential Fish Habitat (EFH).

Preliminarily, the described activity will not affect EFH in the project area. This Public Notice initiates EFH consultation with the NMFS. Any comments or recommendations they may have concerning EFH will be considered in our final assessment of the described work.

TRIBAL CONSULTATION: The Alaska District fully supports tribal self-governance and government-to-government relations between Federally recognized Tribes and the Federal government. Tribes with protected rights or resources that could be significantly affected by a proposed Federal action (e.g., a permit decision) have the right to consult with the Alaska District on a government-to-government basis. Views of each Tribe regarding protected rights and resources will be accorded due

consideration in this process. This Public Notice serves as notification to the Tribes within the area potentially affected by the proposed work and invites their participation in the Federal decision-making process regarding the protected Tribal right or resource. Consultation may be initiated by the affected Tribe upon written request to the District Commander during the public comment period.

PUBLIC HEARING: Any person may request, in writing, within the comment period specified in this notice, that a public hearing be held to consider this application. Requests for public hearings shall state, with particularity, reasons for holding a public hearing.

EVALUATION: The decision whether to issue a permit will be based on an evaluation of the probable impacts including cumulative impacts of the proposed activity and its intended use on the public interest. Evaluation of the probable impacts, which the proposed activity may have on the public interest, requires a careful weighing of all the factors that become relevant in each particular case. The benefits, which reasonably may be expected to accrue from the proposal, must be balanced against its reasonably foreseeable detriments. The outcome of the general balancing process would determine whether to authorize a proposal, and if so, the conditions under which it will be allowed to occur. The decision should reflect the national concern for both protection and utilization of important resources. All factors, which may be relevant to the proposal, must be considered including the cumulative effects thereof. Among those are conservation, economics, aesthetics, general environmental concerns, wetlands, cultural values, fish and wildlife values, flood hazards, floodplain values, land use, navigation, shore erosion and accretion, recreation, water supply and conservation, water quality, energy needs, safety, food and fiber production, mineral needs, considerations of property ownership, and, in general, the needs and welfare of the people. For activities involving 404 discharges, a permit will be denied if the discharge that would be authorized by such permit would not comply with the Environmental Protection Agency's 404(b)(1) guidelines. Subject to the preceding sentence and any other applicable guidelines or criteria (see Sections 320.2 and 320.3), a permit will be granted unless the District Commander determines that it would be contrary to the public interest.

The Corps of Engineers is soliciting comments from the public; Federal, State, and local agencies and officials; Indian Tribes; and other interested parties in order to consider and evaluate the impacts of this proposed activity. Any comments received will be considered by the Corps of Engineers to determine whether to issue, modify, condition or deny a permit for this proposal. To make this decision, comments are used to assess impacts on endangered species, historic properties, water quality, general environmental effects, and the other public interest factors listed above. Comments are used in the preparation of an Environmental Assessment and/or an Environmental Impact Statement pursuant to the National Environmental Policy Act. Comments are also used to determine the need for a public hearing and to determine the overall public interest of the proposed activity.

AUTHORITY: This permit will be issued or denied under the following authority:

(X) Perform work in or affecting navigable waters of the United States - Section 10 Rivers and Harbors Act 1899 (33 U.S.C. 403).

(X) Discharge dredged or fill material into waters of the United States - Section 404 Clean Water Act (33 U.S.C. 1344). Therefore, our public interest review will consider the guidelines set forth under Section 404(b) of the Clean Water Act (40 CFR 230).

Project drawings, Notice of Application for Certification of Consistency with the Alaska Coastal Management Program, and Notice of Application for State Water Quality Certification are enclosed with this Public Notice.

District Commander
U.S. Army, Corps of Engineers

Enclosures

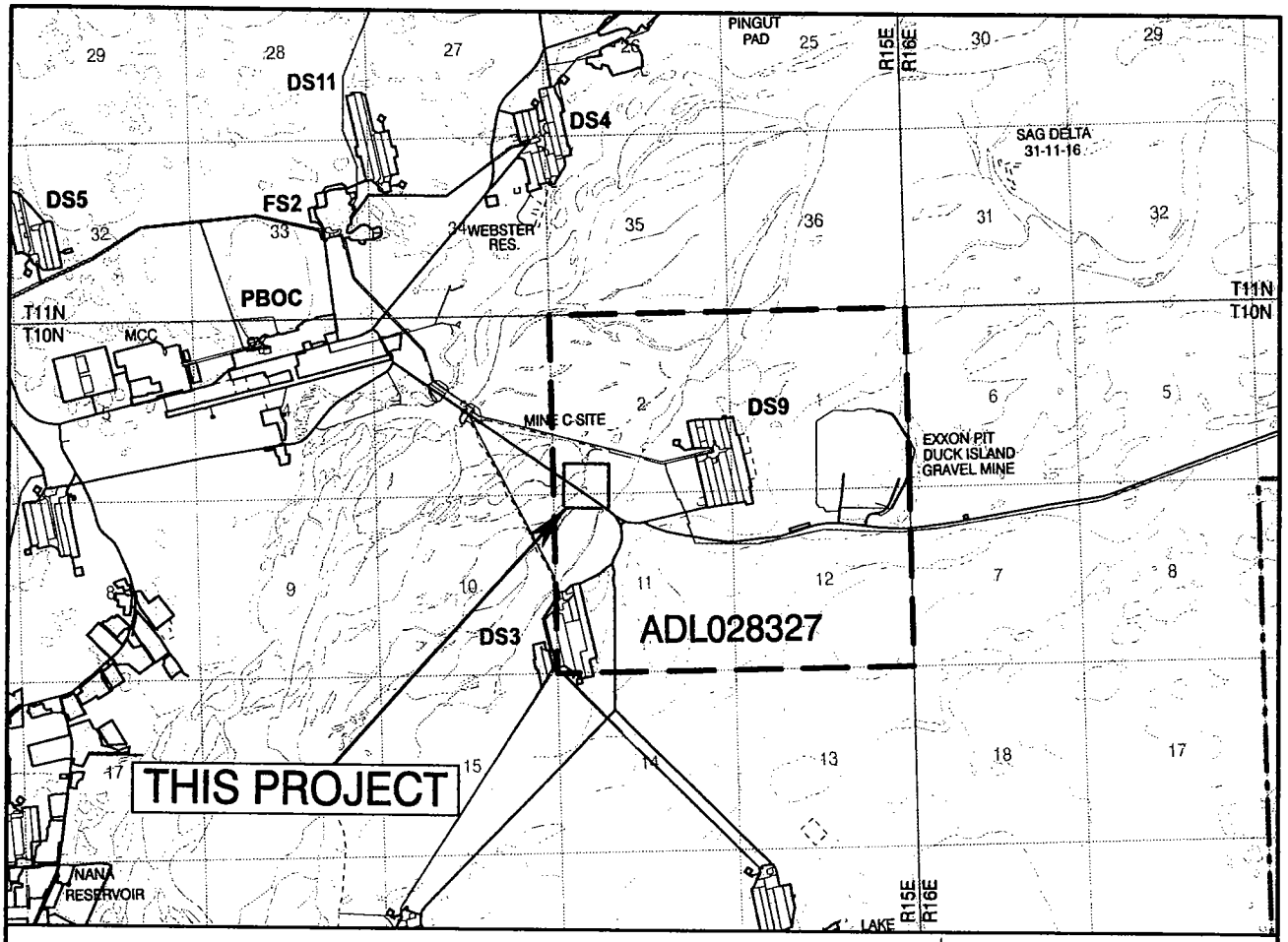

This map is based on U.S.G.S. quad Beechey Point (A-3) and on the Unit Operator's Facility Maps.

NORTH

PROJECT LOCATION:

PRUDHOE BAY UNIT - VERN LAKE ACCESS PAD

NORTH AMERICAN DATUM 1983
LAT. = 70° 14' 34.524" N
LONG. = -148° 16' 25.300" W

ALASKA STATE PLANE ZONE 4, NAD 83
X = 1,854,128.90 FEET
Y = 5,941,289.69 FEET

NORTH AMERICAN DATUM 1927
LAT. = 70° 14' 35.484" N
LONG. = -148° 16' 14.422" W

ALASKA STATE PLANE ZONE 4, NAD 27
X = 714,092.861 FEET
Y = 5,941,535.72 FEET

SEC. 2, T10N, R15E

ADL # 028327

DATUM: MEAN SEA LEVEL

PURPOSE: PAD EXPANSION

ADJACENT PROPERTY OWNER:
STATE OF ALASKA

BP EXPLORATION (ALASKA) INC.

PRUDHOE BAY UNIT
VERN LAKE (MINE SITE C)
GRAVEL EXPANSION
VICINITY MAP

DATE:	SCALE:	FIGURE:
June 2008	1" = 1 Mile	1

vp15580v.dgn

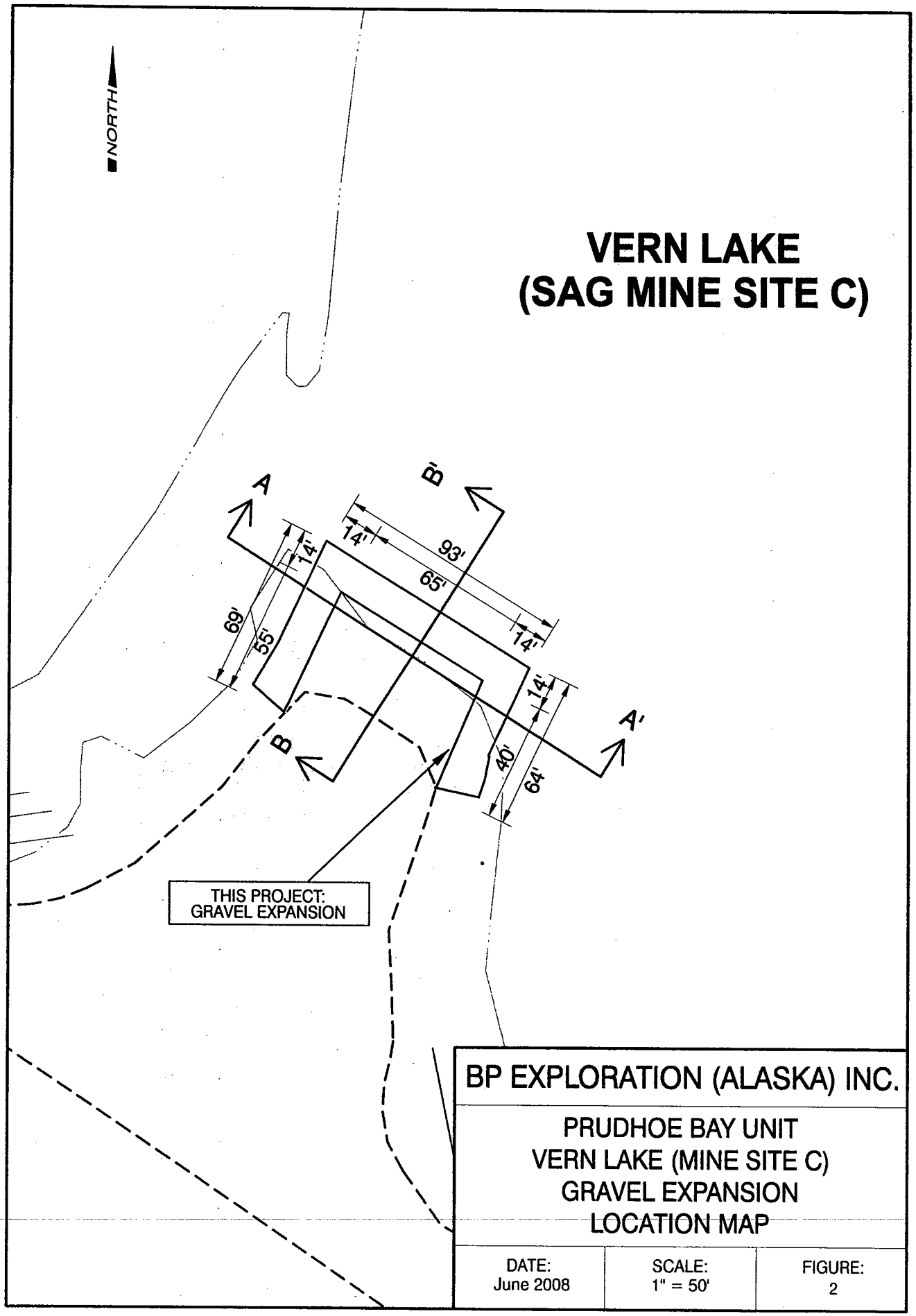

vp15580l.dgn

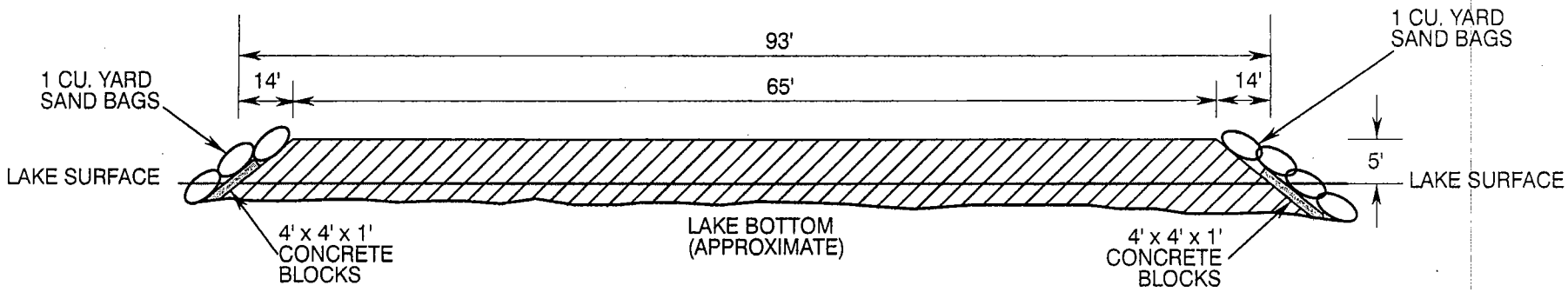

CROSS-SECTION A-A'

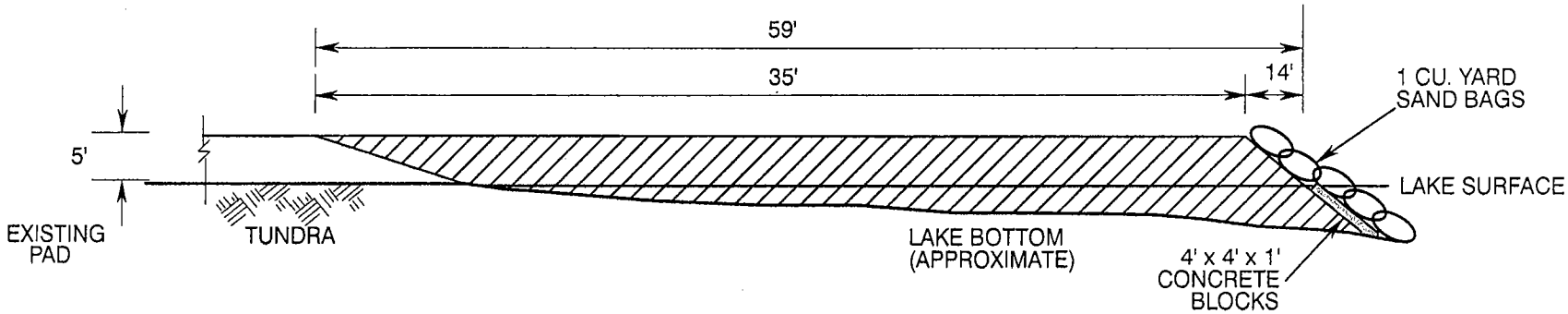

CROSS-SECTION B-B'

New Gravel - This Project

ALL DIMENSIONS ARE APPROXIMATE

BP EXPLORATION (ALASKA) INC.		
PRUDHOE BAY UNIT VERN LAKE (MINE SITE C) GRAVEL EXPANSION CROSS SECTIONS		
DATE: June 2008	SCALE: NOT TO SCALE	FIGURE: 3

gp15580l.asb

SARAH PALIN, GOVERNOR

STATE OF ALASKA

DEPARTMENT OF NATURAL RESOURCES
DIVISION OF COASTAL AND OCEAN MANAGEMENT

DIVISION OF COASTAL AND OCEAN MANAGEMENT
550 WEST 7TH AVENUE, SUITE 705
ANCHORAGE, ALASKA 99501-3559
PHONE: (907) 269-7470/FAX: (907) 269-3981

NOTICE OF APPLICATION
FOR
CERTIFICATION OF CONSISTENCY WITH THE
ALASKA COASTAL MANAGEMENT PROGRAM

Notice is hereby given that a request is being filed with the Division of Coastal and Ocean Management for a consistency determination, as provided in Section 307(c)(3) of the Coastal Zone Management Act of 1972, as amended [16 U.S.C. 1456(c)(3)], that the project described in the Corps of Engineers Public Notice No. **POA-1987-0277-M1, Sagavanirktok River**, will comply with the Alaska Coastal Management Program and that the project will be conducted in a manner consistent with that program.

This project is being reviewed for consistency with the Alaska Coastal Management Program. Written comments about the consistency of the project with the applicable ACMP statewide standards and district policies must be submitted to the Division of Coastal and Ocean Management (DCOM). For information about this consistency review, contact DCOM at the address or phone number above, or visit the ACMP web site at http://www.alaskacoast.state.ak.us//Projects/projects.html.

SARAH PALIN, GOVERNOR

STATE OF ALASKA

DEPT. OF ENVIRONMENTAL CONSERVATION
DIVISION OF WATER
401 Certification Program
Non-Point Source Water Pollution Control Program

DEPARTMENT OF ENVIRONMENTAL CONSERVATION
WQM/401 CERTIFICATION
555 CORDOVA STREET
ANCHORAGE, ALASKA 99501-2617
PHONE: (907) 269-7564/FAX: (907) 334-2415

NOTICE OF APPLICATION
FOR
STATE WATER QUALITY CERTIFICATION

Any applicant for a federal license or permit to conduct an activity that might result in a discharge into navigable waters, in accordance with Section 401 of the Clean Water Act of 1977 (PL95-217), also must apply for and obtain certification from the Alaska Department of Environmental Conservation that the discharge will comply with the Clean Water Act, the Alaska Water Quality Standards, and other applicable State laws. By agreement between the U.S. Army Corps of Engineers and the Department of Environmental Conservation, application for a Department of the Army permit to discharge dredged or fill material into navigable waters under Section 404 of the Clean Water Act also may serve as application for State Water Quality Certification.

Notice is hereby given that the application for a Department of the Army Permit described in the Corps of Engineers' Public Notice No. **POA-1987-0277-M1, Sagavanirktok River**, serves as application for State Water Quality Certification from the Department of Environmental Conservation.

After reviewing the application, the Department may certify there is reasonable assurance the activity, and any discharge that might result, will comply with the Clean Water Act, the Alaska Water Quality Standards, and other applicable State laws. The Department also may deny or waive certification.

Any person desiring to comment on the project, with respect to Water Quality Certification, may submit written comments to the address above by the expiration date of the Corps of Engineer's Public Notice.