US Army Corps
of Engineers
Alaska District

Public Notice of Application for Permit

Regulatory Division (1145)
CEPOA-RD
Post Office Box 6898
Elmendorf AFB, Alaska 99506-0898

PUBLIC NOTICE DATE: 27 March 2007

EXPIRATION DATE: 25 April 2007

REFERENCE NUMBER: POA-2006-1338-4

WATERWAY: Lake Hood

Interested parties are hereby notified that a Department of the Army permit application has been received for work in waters of the United States as described below and shown on the enclosed project drawings.

APPLICANT: U.S. Department of the Interior, National Business Center, Alaska Region/Aviation Management, 4405 Lear Court, Anchorage, Alaska 99502-1032; Point of Contact: Mr. Thomas Egan.

LOCATION: The proposed project is located within Section 34, T. 13 N., R. 4 W., Seward Meridian; Latitude 61.179° N., Longitude -149.967° W.; USGS Quad Map A-8 NW; MOA Wetlands Atlas Map #40; behind the Aviation Management facility along the southern edge of Lake Hood near Gull Island, in Anchorage, Alaska.

PURPOSE: The applicant's stated purpose is to perform maintenance to six (6) float plane slips, maintained by Aviation Management Directorate Alaska Region. Wave action on Lake Hood and stormwater runoff has eroded the edges of the slips, resulting in sediment accumulating along the bottom of the slips, compromising float plane accessibility and aircraft personnel safety.

PROPOSED WORK:

DREDGING OF SLIPS: Approximately 95-110 cubic yards of material would be dredged from below the ordinary high water (OHW) mark of Lake Hood within the entire float slip area (approximately 16-18 cubic yards per slip); such dredging which would not have more than minimal fallback of dredged material into the water and therefore does not require a Corps permit under Section 404 of the Clean Water Act. A portion of the dredged material would be removed off site to an upland location; the remaining dredged material would be spread out above OHW behind the existing bulkheads.

DISCHARGE OF FILL: The applicant does not anticipate needing to discharge any fill material into Lake Hood if the dredging portion of the project alone is adequate. If not, a maximum of four (4) cubic

yards of new sand and 14 cubic yards of 3+ inch size rock may be placed along the bottom of all slips, for the protection of floats, should they make contact with the bottom. A maximum of 24 cubic yards of sand & 84 cubic yards of rock may be discharged below OHW for all slips combined.

MAINTENANCE TO BULKHEADS: New 2-inch by 12-inch pressure-treated planks would be installed where needed for each bulkhead; existing steel piles would be reused. Approximately 14 cubic yards of 3+ inch size rock would be placed behind each slip's side retaining walls (84 cubic yards in total); geogrid would be placed on top of the new fill and seeded with native grass species suitable to the site.

ADDITIONAL INFORMATION: Our records indicate that the slips were not previously permitted and were not constructed prior to September 1, 1976, the date prior to which such structures or fills are grandfathered per our regulations (33 CFR Part 330.3). The use of Nationwide Permit (NWP) #3, 'Maintenance', is not applicable in this particular instance since the slips were not previously permitted. A Letter of Permission for the proposed work would also not be applicable to this particular proposal, as Lake Hood is not regulated under Section 10 of the Rivers and Harbors Act, but rather Section 404 of the Clean Water Act. The amount of fill that may be discharged below OHW would exceed the 25 cubic yard limitation of NWP #18, 'Minor Discharges'.

MITIGATION: The applicant has proposed the following mitigation measures to reduce impacts to the aquatic environment: Installation of silt fences and floating boom to avoid and minimize impacts beyond the immediate work area caused by suspended sediment and turbidity.

WATER QUALITY CERTIFICATION: A permit for the described work will not be issued until a certification or waiver of certification, as required under Section 401 of the Clean Water Act (Public Law 95-217), has been received from the Alaska Department of Environmental Conservation.

COASTAL ZONE MANAGEMENT ACT CERTIFICATION: Section 307(c)(3) of the Coastal Zone, Management Act of 1972, as amended by 16 U.S.C. 1456(c)(3), requires the applicant to certify the described activity affecting land or water uses in the Coastal Zone complies with the Alaska Coastal Management Program. A permit will not be issued until the Office of Project Management and Permitting, Department of Natural Resources has concurred with the applicant's certification.

CULTURAL RESOURCES: The latest published version of the Alaska Heritage Resources Survey (AHRS) has been consulted for the presence or absence of historic properties, including those listed in or eligible for inclusion in the National Register of Historic Places. There is an unevaluated property in the vicinity of the worksite. It has been designated 'GRUMMAN J2F-6 (OA-12) DUCK AIRCRAFT'. Because the property has been determined to be outside of the project area, no further action is required. Consultation of the AHRS constitutes the extent of cultural resource investigations by the District Commander at this time. This application is being coordinated with SHPO. Any comments SHPO may have concerning presently unknown archeological or historic data that may be lost or destroyed by work under the requested permit will be considered in our final assessment of the described work.

ENDANGERED SPECIES: No threatened or endangered species are known to use the project area.

ESSENTIAL FISH HABITAT: The Magnuson-Stevens Fishery Conservation and Management Act, as amended by the Sustainable Fisheries Act of 1996, requires all Federal agencies to consult with the NMFS on all actions, or proposed actions, permitted, funded, or undertaken by the agency, that may adversely affect Essential Fish Habitat (EFH).

Preliminarily, the described activity will not affect EFH in the project area. This Public Notice initiates EFH consultation with the NMFS. Any comments or recommendations they may have concerning EFH will be considered in our final assessment of the described work.

TRIBAL CONSULTATION: The Alaska District fully supports tribal self-governance and government-to-government relations between Federally recognized Tribes and the Federal government. Tribes with protected rights or resources that could be significantly affected by a proposed Federal action (e.g., a permit decision) have the right to consult with the Alaska District on a government-to-government basis. Views of each Tribe regarding protected rights and resources will be accorded due consideration in this process. This Public Notice serves as notification to the Tribes within the area potentially affected by the proposed work and invites their participation in the Federal decision-making process regarding the protected Tribal right or resource. Consultation may be initiated by the affected Tribe upon written request to the District Commander during the public comment period.

PUBLIC HEARING: Any person may request, in writing, within the comment period specified in this notice, that a public hearing be held to consider this application. Requests for public hearings shall state, with particularity, reasons for holding a public hearing.

EVALUATION: The decision whether to issue a permit will be based on an evaluation of the probable impacts including cumulative impacts of the proposed activity and its intended use on the public interest. Evaluation of the probable impacts, which the proposed activity may have on the public interest, requires a careful weighing of all the factors that become relevant in each particular case. The benefits, which reasonably may be expected to accrue from the proposal, must be balanced against its reasonably foreseeable detriments. The outcome of the general balancing process would determine whether to authorize a proposal, and if so, the conditions under which it will be allowed to occur. The decision should reflect the national concern for both protection and utilization of important resources. All factors, which may be relevant to the proposal, must be considered including the cumulative effects thereof. Among those are conservation, economics, aesthetics, general environmental concerns, wetlands, cultural values, fish and wildlife values, flood hazards, floodplain values, land use, navigation, shore erosion and accretion, recreation, water supply and conservation, water quality, energy needs, safety, food and fiber production, mineral needs, considerations of property ownership, and, in general, the needs and welfare of the people. For activities involving 404 discharges, a permit will be denied if the discharge that would be authorized by such permit would not comply with the Environmental Protection Agency's 404(b)(1) guidelines. Subject to the preceding sentence and any other applicable guidelines or criteria (see Sections 320.2 and 320.3), a permit will be granted unless the District Commander determines that it would be contrary to the public interest.

The Corps of Engineers is soliciting comments from the public; Federal, State, and local agencies and officials; Indian Tribes; and other interested parties in order to consider and evaluate the impacts of this proposed

activity. Any comments received will be considered by the Corps of Engineers to determine whether to issue, modify, condition or deny a permit for this proposal. To make this decision, comments are used to assess impacts on endangered species, historic properties, water quality, general environmental effects, and the other public interest factors listed above. Comments are used in the preparation of an Environmental Assessment and/or an Environmental Impact Statement pursuant to the National Environmental Policy Act. Comments are also used to determine the need for a public hearing and to determine the overall public interest of the proposed activity.

Comments on the described work, with the reference number, should reach this office no later than the expiration date of this Public Notice to become part of the record and be considered in the decision. Please contact Ms. Tracy DeGering at (907) 753-2712, toll free from within Alaska at (800) 478-2712, or by email at Tracy.T.DeGering@poa02.usace.army.mil if further information is desired concerning this notice.

AUTHORITY: This permit will be issued or denied under the following authorities:

(X) Discharge dredged or fill material into waters of the United States - Section 404 Clean Water Act (33 U.S.C. 1344). Therefore, our public interest review will consider the guidelines set forth under Section 404(b) of the Clean Water Act (40 CFR 230).

Project drawings, Notice of Application for Certification of Consistency with the Alaska Coastal Management Program, and Notice of Application for State Water Quality Certification are enclosed with this Public Notice.

District Commander
U.S. Army, Corps of Engineers

Enclosures

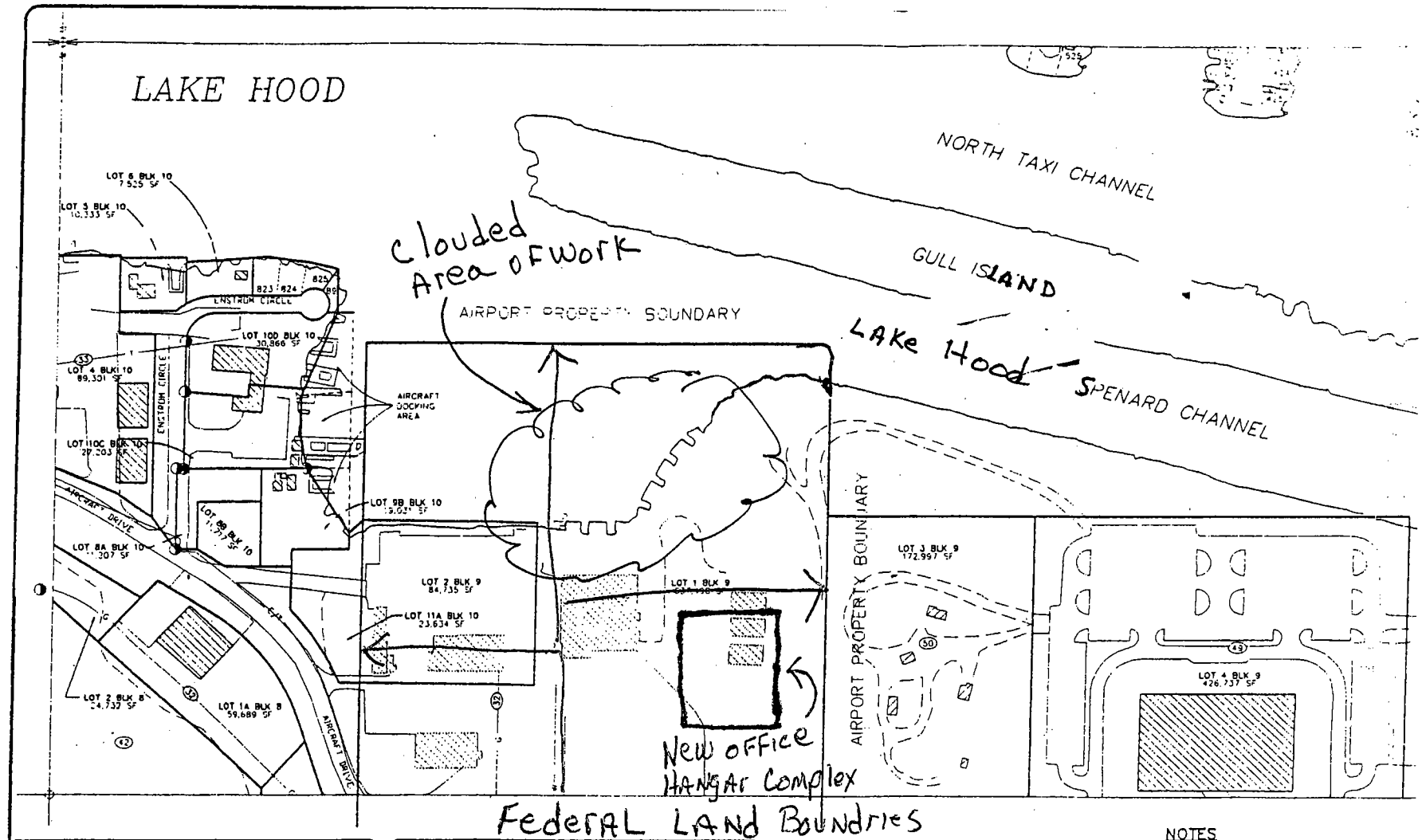

LAND OCCUPANCY					
BLK	LOT	ADA#	AREA(SF)	OCCUPANT	EXP DATE
10	4	01071	89,301	MUNICIPALITY OF ANCHORAGE	7-1-2015
10	5	02125	10,333	JAMES K. HARROWER	9-30-2017
10	6	30674	7,525	OPPORTUNITY FLYING CLUB	8-25-2000
10	8A		11,207		
10	8B	03880	11,717	ALASKA WING CIVIL AIR PATROL	7-11-2004
10	9B	03880	19,031	ALASKA WING CIVIL AIR PATROL	7-11-2004
10	10C	05479	27,203	RUSTS FLYING SERVICE, INC.	6-30-97
10	10D	05594	30,866	BRIAN W. GILLETTE	10-31-2003
10	11A	30811	23,634	DEPT. PUBLIC SAFETY	1-31-2002
8	2		24,732		
8	1A	04983	58,689	ALASKA WING C.A.P.	10-14-2017
9	1	------	637,498	U.S. F.W.S.	INDEFINITE
9	2	------	84,735	AK. DEPT. PUBLIC SAFETY	INDEFINITE
9	3	------	172,997	F.A.A.	INDEFINITE

LAND OCCUPANCY					
BLK	LOT	ADA#	AREA(SF)	OCCUPANT	EXP DATE
9	4	------	426,737	D.O.T./P.F. DIV. AVIATION	INDEFINITE

NOTES

1. LOT DIMENSIONS AND AREAS REFLECT INFORMA CONTAINED IN AIRPORT LEASES.
2. SEE AIRPORT ENGINEERING FOR MOST CURRENT INFORMATION.
3. UTILITY LOCATIONS SHOWN HEREON ARE APPRO ONLY AND MAY NOT INCLUDE ALL UTILITIES THA ACTUALLY EXIST. CONTACT THE APPROPRIATE COMPANY OR DEPARTMENT FOR MORE INFORMA

UTILITIES / EASEMENTS			
ITEM #	ADA#	AREA(SF)	OCCUPANT	EXP DATE
21	01775		MUNICIPALITY OF ANCHORAGE, MLP	INDEFINITE
32	02339		ANCH. NATURAL GAS	INDEFINITE
33	00894		MUNICIPALITY OF ANCHORAGE, ATU	INDEFINITE
42	02361		ALASKA D.O.T.	INDEFINITE
49			AK. D.O.T. P.F. DIV. AVIATION	INDEFINITE
50			U.S. D.O.T. F.A.A. RESERVE	INDEFINITE

RECORD INFORMATION SET

GRAPHIC SCALE
100 0 50 100 200
SCALE IN FEET

PLOTTED: FEB 13 1998 08:58:51 PC1
REVISED: FEB 09 1998 13:07:58
CREATED: SEP 29 1993 17:14:40
LOVLO_PROTO.DWG

AIRPORT LEASING

STATE OF ALASKA
DEPARTMENT OF TRANSPORTATION AND PUBLIC FACILITIES
Anchorage International Airport

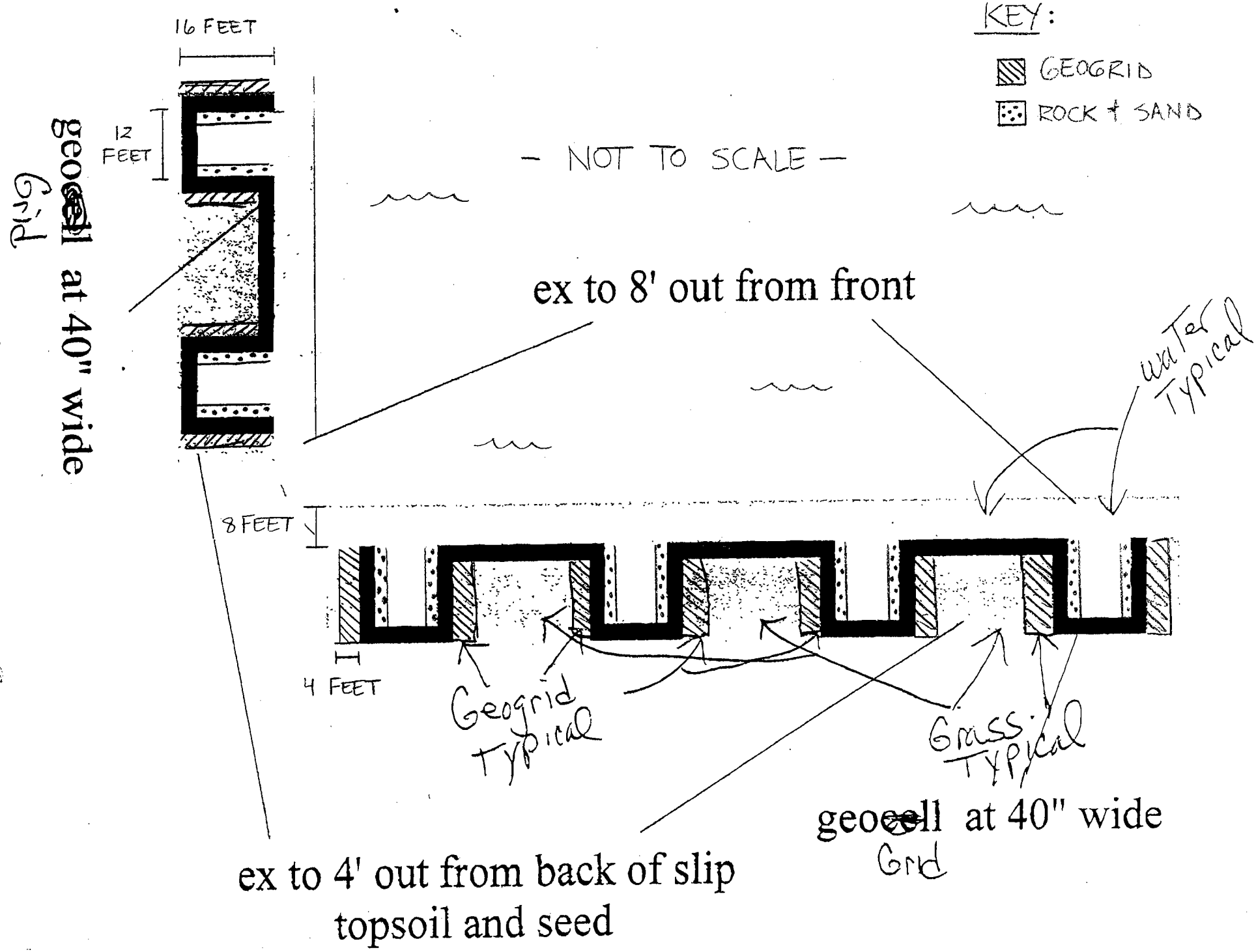
KEY:
GEOGRID
ROCK + SAND
16 FEET
12 FEET
- NOT TO SCALE -
ex to 8' out from front
water Typical
8 FEET
4 FEET
Geogrid Typical
Grass Typical
geocell at 40" wide
Grid
ex to 4' out from back of slip
topsoil and seed

AVIATION MANAGEMENT FLOAT SLIP REPAIR.
LAKE HOOD

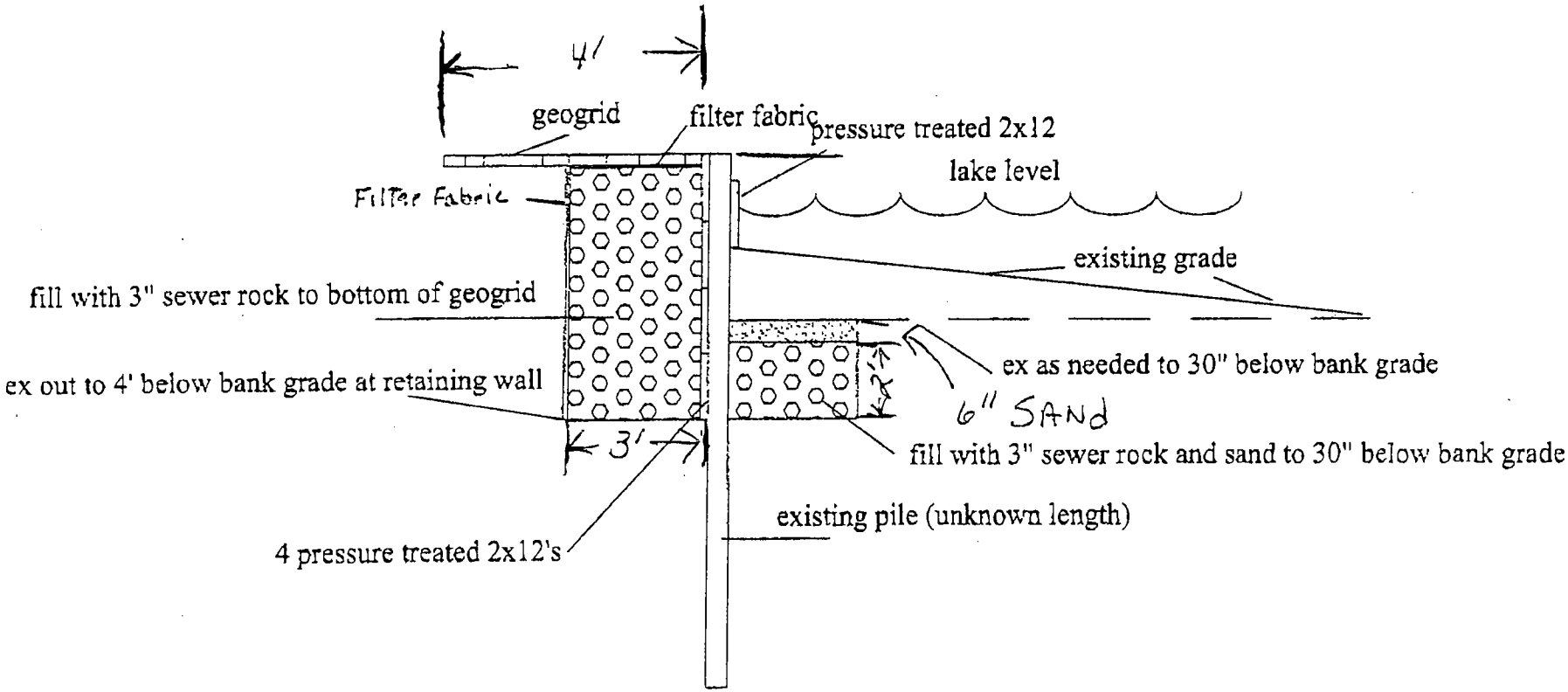

NOT TO SCALE

Aviation Management Float Slip Repair.
Lake Hood.

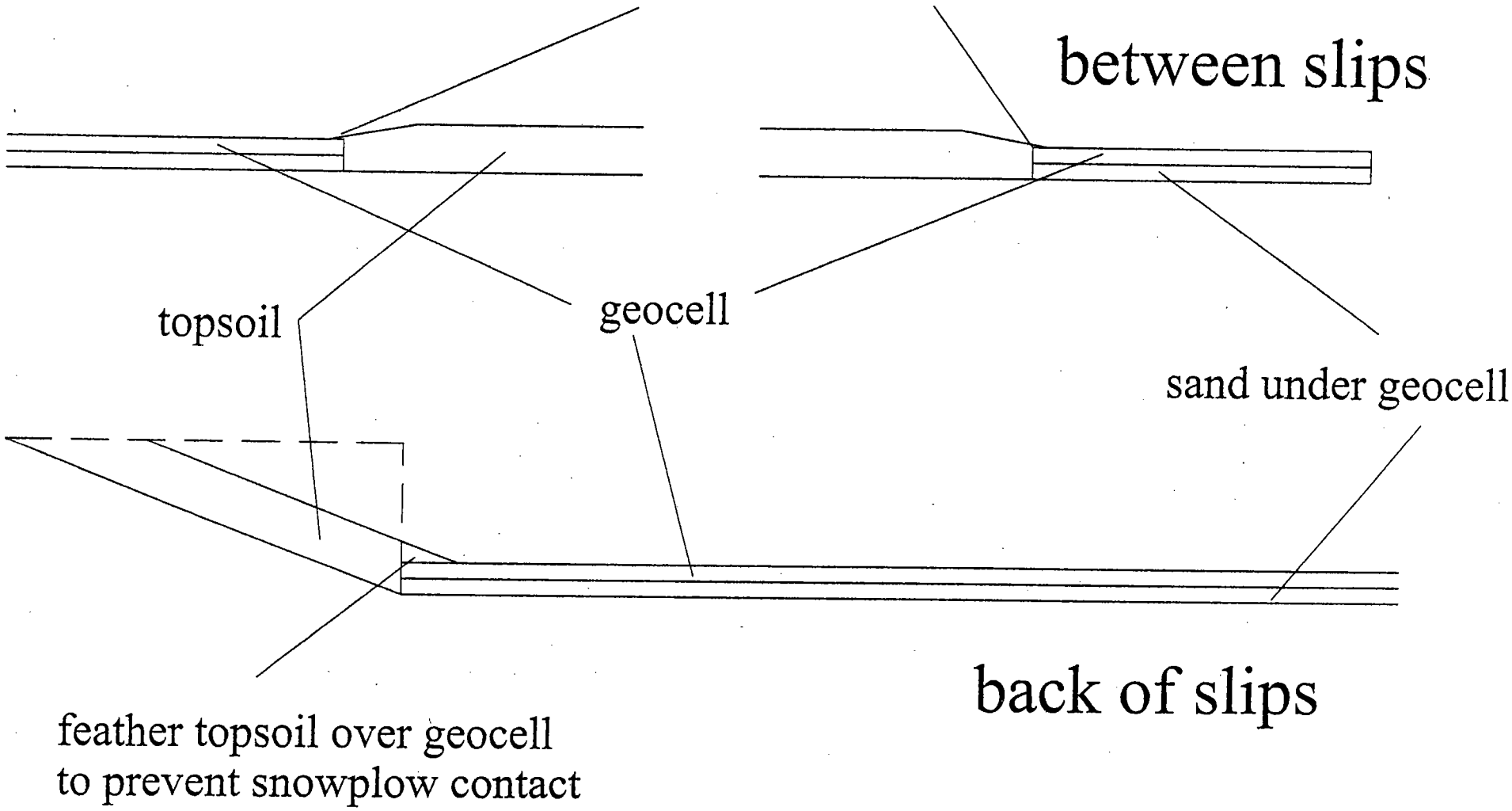

SARAH PALIN, GOVERNOR

STATE OF ALASKA

DEPT. OF ENVIRONMENTAL CONSERVATION
DIVISION OF WATER
401 Certification Program
Non-Point Source Water Pollution Control Program

DEPARTMENT OF ENVIRONMENTAL CONSERVATION
WQM/401 CERTIFICATION
555 CORDOVA STREET
ANCHORAGE, ALASKA 99501-2617
PHONE: (907) 269-7564/FAX: (907) 334-2415

NOTICE OF APPLICATION
FOR
STATE WATER QUALITY CERTIFICATION

Any applicant for a federal license or permit to conduct an activity that might result in a discharge into navigable waters, in accordance with Section 401 of the Clean Water Act of 1977 (PL95-217), also must apply for and obtain certification from the Alaska Department of Environmental Conservation that the discharge will comply with the Clean Water Act, the Alaska Water Quality Standards, and other applicable State laws. By agreement between the U.S. Army Corps of Engineers and the Department of Environmental Conservation, application for a Department of the Army permit to discharge dredged or fill material into navigable waters under Section 404 of the Clean Water Act also may serve as application for State Water Quality Certification.

Notice is hereby given that the application for a Department of the Army Permit described in the Corps of Engineers' Public Notice No. **POA-2006-1338, Lake Hood**, serves as application for State Water Quality Certification from the Department of Environmental Conservation.

After reviewing the application, the Department may certify there is reasonable assurance the activity, and any discharge that might result, will comply with the Clean Water Act, the Alaska Water Quality Standards, and other applicable State laws. The Department also may deny or waive certification.

Any person desiring to comment on the project, with respect to Water Quality Certification, may submit written comments to the address above by the expiration date of the Corps of Engineer's Public Notice.

SARAH PALIN, GOVERNOR

STATE OF ALASKA

DEPARTMENT OF NATURAL RESOURCES
OFFICE OF PROJECT MANAGEMENT AND PERMITTING

OFFICE OF PROJECT MANAGEMENT AND PERMITTING
550 WEST 7TH AVENUE, SUITE 705
ANCHORAGE, ALASKA 99501-3559
PHONE: (907) 269-7470/FAX: (907) 269-3981

NOTICE OF APPLICATION
FOR
CERTIFICATION OF CONSISTENCY WITH THE
ALASKA COASTAL MANAGEMENT PROGRAM

Notice is hereby given that a request is being filed with the Office of Project Management and Permitting for a consistency determination, as provided in Section 307(c)(3) of the Coastal Zone Management Act of 1972, as amended [16 U.S.C. 1456(c)(3)], that the project described in the Corps of Engineers Public Notice No. **POA-2006-1338, Lake Hood**, will comply with the Alaska Coastal Management Program and that the project will be conducted in a manner consistent with that program.

This project is being reviewed for consistency with the Alaska Coastal Management Program. Written comments about the consistency of the project with the applicable ACMP statewide standards and district policies must be submitted to the Office of Project Management and Permitting (OPMP). For information about this consistency review, contact OPMP at the address or phone number above, or visit the ACMP web site at http://www.alaskacoast.state.ak.us//Projects/projects.html.