US Army Corps
of Engineers
Alaska District

Public Notice of Application for Permit

Regulatory Branch (1145b)
Post Office Box 6898
Elmendorf AFB, Alaska 99506-6898

PUBLIC NOTICE DATE: 08 October 2004

EXPIRATION DATE: 08 November 2004

REFERENCE NUMBER: POA-2004-1456

WATERWAY NUMBER: Deep Bay

****PARTIAL AFTER-THE-FACT PERMIT APPLICATION****

Interested parties are hereby notified that an application has been received for a Department of the Army permit for certain work in waters of the United States as described below and shown on the attached plan.

APPLICANT: Mr. Gerald and Ms. Sharon Wick, Post Office Box 1236, Hereford, Arizona 85615.

AGENT: Mr. Fred Monrean, Monrean Engineering and Associates, Post Office Box 9343, Ketchikan, Alaska 99901.

LOCATION: In Deep Bay on Revillagigedo Island, near Ketchikan, Alaska, section 11, T. 73 S., R. 90 E., Copper River Meridian, Latitude 55° 33′ 34″ N., Longitude 131° 40′ 42″ W. in US Survey 2816, Lot 2.

WORK: The applicants request authorization to retain an existing sewage outfall. The outfall was constructed by excavating a 2-foot deep trench and placing a 4-inch PVC pipe, then backfilling the trench. The outfall extends past Mean Lower Low Water (MLLW, -4.0 foot elevation). Additionally, the applicants propose to construct an "L-shaped" floating dock that would consist of a 60-foot by 6-foot main section with a 40-foot by 10-foot end section placed toward the southwest side of the main section. The floating portion would be held in place with the use of three 12-inch driven steel piles. A concrete abutment would be constructed to place the 4-foot by 50-foot aluminum ramp that would connect the floating portion to the land.

PURPOSE: The purpose of the outfall is to provide waste disposal for the applicants home and the proposed dock would be located to allow access for the applicant and the adjacent property owners to their existing homes.

WATER QUALITY CERTIFICATION: A permit for the described work will not be issued until a certification or waiver of certification as required under Section 401 of the Clean Water Act (Public Law 95-217), has been received from the Alaska Department of Environmental Conservation.

COASTAL ZONE MANAGEMENT ACT CERTIFICATION: Section 307(c)(3) of the Coastal Zone, Management Act of 1972, as amended by 16 U.S.C. 1456(c)(3), requires the applicant to certify that the described activity affecting land or water uses in the Coastal Zone complies with the Alaska Coastal Management Program. A permit will not be

issued until the Office of Project Management and Permitting, Department of Natural Resources has concurred with the applicant's certification.

PUBLIC HEARING: Any person may request, in writing, within the comment period specified in this notice, that a public hearing be held to consider this application. Requests for public hearings shall state, with particularity, reasons for holding a public hearing.

CULTURAL RESOURCES: The latest published version of the Alaska Heritage Resources Survey (AHRS) has been consulted for the presence or absence of historic properties, including those listed in or eligible for inclusion in the National Register of Historic Places. There are no listed or eligible properties in the vicinity of the worksite. Consultation of the AHRS constitutes the extent of cultural resource investigations by the District Engineer at this time, and he is otherwise unaware of the presence of such resources. This application is being coordinated with the State Historic Preservation Office (SHPO). Any comments SHPO may have concerning presently unknown archeological or historic data that may be lost or destroyed by work under the requested permit will be considered in our final assessment of the described work.

TRIBAL CONSULTATION: The Alaska District fully supports tribal self-governance and government-to-government relations between the Federal government and Federally recognized Tribes. This notice invites participation by agencies, Tribes, and members of the public in the Federal decision-making process. In addition, Tribes with protected rights or resources that could be significantly affected by a proposed Federal action (e.g., a permit decision) have the right to consult with the Alaska District on a government-to-government basis. Views of each Tribe regarding protected rights and resources will be accorded due consideration in this process. This Public Notice serves as notification to the Tribes within the area potentially affected by the proposed work and invites their participation in the Federal decision-making process regarding the protected Tribal right or resource. Consultation may be initiated by the affected Tribe upon written request to the District Engineer during the public comment period.

ENDANGERED SPECIES: Preliminarily, the described activity will not affect threatened or endangered species, or their critical habitat designated as endangered or threatened, under the Endangered Species Act of 1973 (87 Stat. 844). This application is being coordinated with the U.S. Fish and Wildlife Service and the National Marine Fisheries Service. Any comments they may have concerning endangered or threatened wildlife or plants or their critical habitat will be considered in our final assessment of the described work.

ESSENTIAL FISH HABITAT: The proposed work is being evaluated for possible effects to Essential Fish Habitat (EFH) pursuant to the Magnuson Stevens Fishery Conservation and Management Act of 1996 (MSFCMA), 16 U.S.C. et seq and associated federal regulations found at 50 CFR 600 Subpart K. The Alaska District includes areas of EFH as Fishery Management Plans. We have reviewed the January 20, 1999, North Pacific Fishery Management Council's Environmental Assessment to locate EFH area as identified by the National Marine Fisheries Service (NMFS).

We have determined that the described activity within the proposed area will not adversely affect EFH, including anadromous fish and federally managed fishery resources.

SPECIAL AREA DESIGNATION: The project is located within the Tongass National Forest.

EVALUATION: The decision whether to issue a permit will be based on an evaluation of the probable impacts including cumulative impacts of the proposed activity and its intended use on the public interest. Evaluation of the probable impacts, which the proposed activity may have on the public interest, requires a careful weighing of all the factors that become relevant in each particular case. The benefits, which reasonably may be expected to accrue from the proposal, must be

balanced against its reasonably foreseeable detriments. The decision whether to authorize a proposal, and if so, the conditions under which it will be allowed to occur, are therefore determined by the outcome of the general balancing process. That decision should reflect the national concern for both protection and utilization of important resources. All factors, which may be relevant to the proposal, must be considered including the cumulative effects thereof. Among those are conservation, economics, aesthetics, general environmental concerns, wetlands, cultural values, fish and wildlife values, flood hazards, floodplain values, land use, navigation, shore erosion and accretion, recreation, water supply and conservation, water quality, energy needs, safety, food and fiber production, mineral needs, considerations of property ownership, and, in general, the needs and welfare of the people. For activities involving 404 discharges, a permit will be denied if the discharge that would be authorized by such permit would not comply with the Environmental Protection Agency's 404(b)(1) guidelines. Subject to the preceding sentence and any other applicable guidelines or criteria (see Sections 320.2 and 320.3), a permit will be granted unless the District Engineer determines that it would be contrary to the public interest.

The Corps of Engineers is soliciting comments from the public; Federal, State, and local agencies and officials; Indian Tribes; and other interested parties in order to consider and evaluate the impacts of this proposed activity. Any comments received will be considered by the Corps of Engineers to determine whether to issue, modify, condition or deny a permit for this proposal. To make this decision, comments are used to assess impacts on endangered species, historic properties, water quality, general environmental effects, and the other public interest factors listed above. Comments are used in the preparation of an Environmental Assessment and/or an Environmental Impact Statement pursuant to the National Environmental Policy Act. Comments are also used to determine the need for a public hearing and to determine the overall public interest of the proposed activity.

Comments on the described work, with the reference number, should reach this office no later than the expiration date of this Public Notice to become part of the record and be considered in the decision. Please contact Ms. Serena Sweet at (907) 753-2720, toll free from within Alaska at (800) 478-2712, or by email at serena.e.sweet@poa02.usace.army.mil if further information is desired concerning this notice.

AUTHORITY: This permit will be issued or denied under the following authorities:

(X) Perform work in or affecting navigable waters of the United States - Section 10 Rivers and Harbors Act 1899 (33 U.S.C. 403).

(X) Discharge dredged or fill material into waters of the United States - Section 404 Clean Water Act (33 U.S.C. 1344). Therefore, our public interest review will consider the guidelines set forth under Section 404(b) of the Clean Water Act (40 CFR 230).

() Transport dredged material for the purpose of dumping it into ocean waters - Section 103 Marine Protection, Research, and Sanctuaries Act of 1972 (33 U.S.C. 1413). Therefore, our public interest review will consider the criteria established under authority of Section 102(a) of the Marine Protection, Research and Sanctuaries Act of 1972, as amended (40 CFR Parts 220 to 229), as appropriate.

A plan, Notice of Application for Certification of Consistency with the Alaska Coastal Management Program, and Notice of Application for State Water Quality Certification are attached to this Public Notice.

District Engineer
U.S. Army, Corps of Engineers

Attachments

SCALE 1:63360

1 2 3 4 MILES

00 9000 12000 15000 18000 21000 FEET

2 3 4 5 KILOMETERS

ONTOUR INTERVAL 100 FEET
DATUM IS MEAN SEA LEVEL

Ketchikan C-6

ROAD CLASSIFICATION

Light-duty

ALASKA

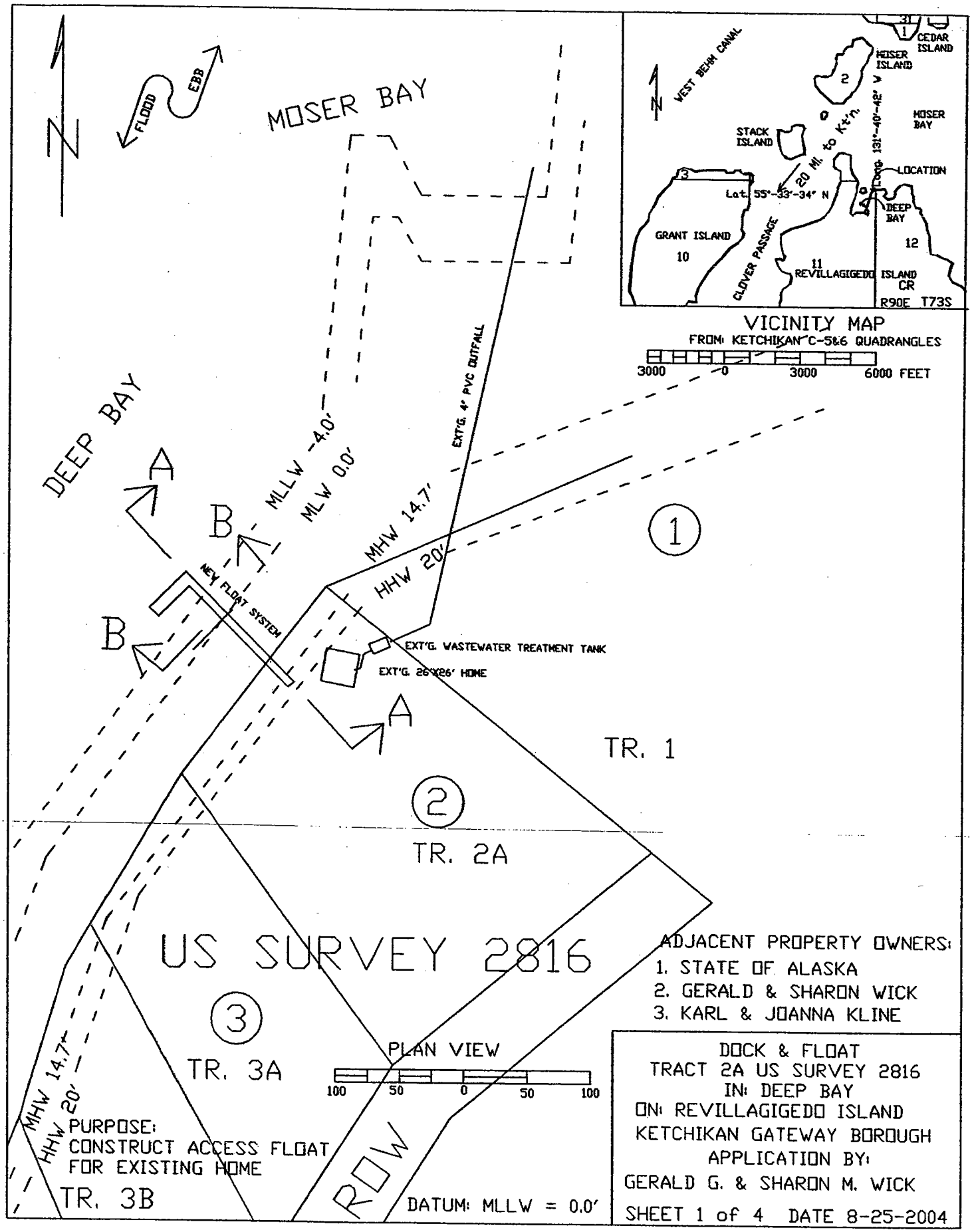
N
FLOOD
EBB
MOSER BAY
DEEP BAY
A
B
B
A
MLLW -4.0'
MLW 0.0'
MHW 14.7'
HHW 20'
EXT'G. 4" PVC OUTFALL
NEW FLOAT SYSTEM
EXT'G. WASTEWATER TREATMENT TANK
EXT'G. 26'X26' HOME
1
TR. 1
2
TR. 2A
US SURVEY 2816
3
TR. 3A
TR. 3B
MHW 14.7'
HHW 20'
ROW
PLAN VIEW
100 50 0 50 100
DATUM: MLLW = 0.0'
PURPOSE:
CONSTRUCT ACCESS FLOAT
FOR EXISTING HOME
ADJACENT PROPERTY OWNERS:
1. STATE OF ALASKA
2. GERALD & SHARON WICK
3. KARL & JOANNA KLINE
DOCK & FLOAT
TRACT 2A US SURVEY 2816
IN: DEEP BAY
ON: REVILLAGIGEDO ISLAND
KETCHIKAN GATEWAY BOROUGH
APPLICATION BY:
GERALD G. & SHARON M. WICK
SHEET 1 of 4 DATE 8-25-2004
WEST BEHM CANAL
CEDAR ISLAND
MOSER ISLAND
MOSER BAY
STACK ISLAND
20 Mi. to Ket'n.
Long. 131°-40'-42" W
LOCATION
Lat. 55°-33'-34" N
DEEP BAY
GRANT ISLAND
CLOVER PASSAGE
REVILLAGIGEDO ISLAND
CR
R90E T73S
VICINITY MAP
FROM: KETCHIKAN C-5&6 QUADRANGLES
3000 0 3000 6000 FEET

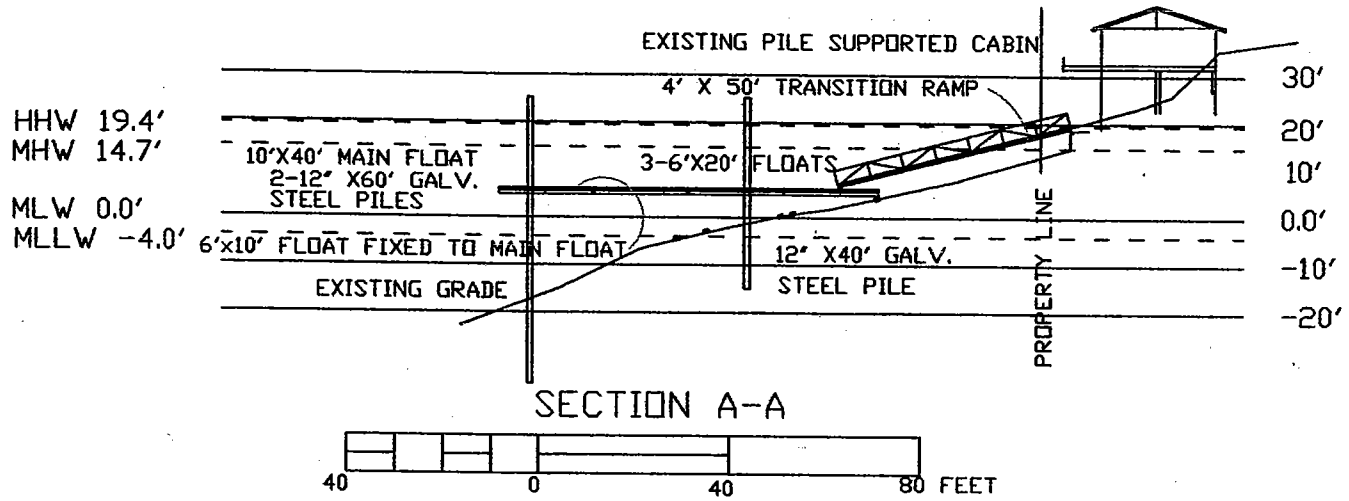

SECTION A-A

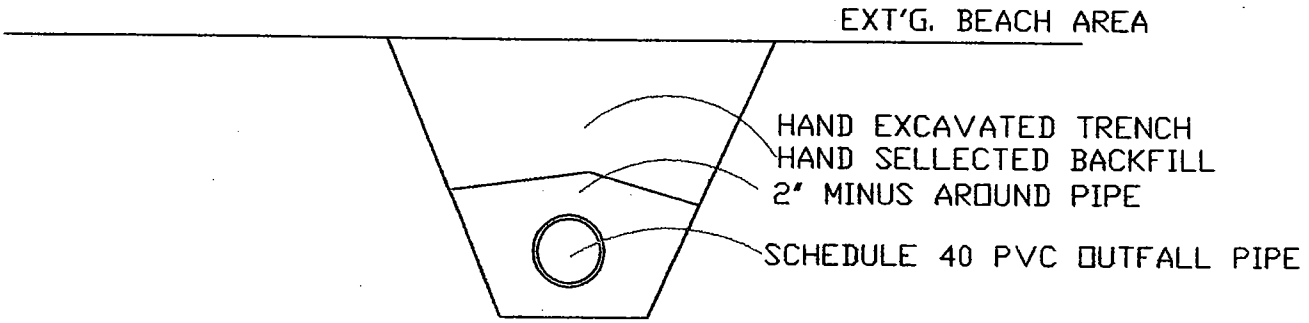

OUTFALL PIPE TRENCH SECTION

SCALE 1"=1'

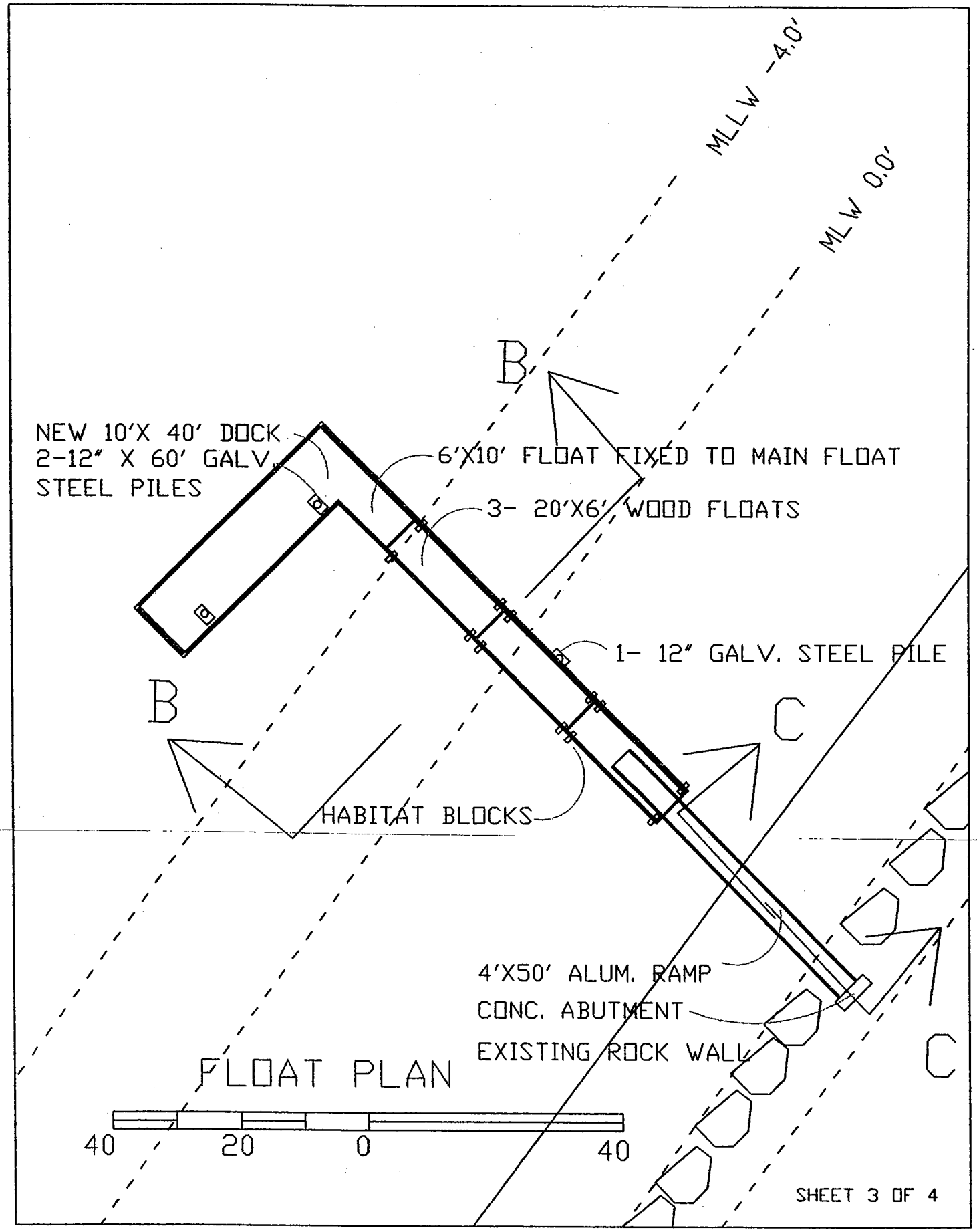
MLLW -4.0'
MLW 0.0'
B
NEW 10'X 40' DOCK
2-12" X 60' GALV.
STEEL PILES
6'X10' FLOAT FIXED TO MAIN FLOAT
3- 20'X6' WOOD FLOATS
1- 12" GALV. STEEL PILE
B
C
HABITAT BLOCKS
4'X50' ALUM. RAMP
CONC. ABUTMENT
EXISTING ROCK WALL
C
FLOAT PLAN
40
20
0
40
SHEET 3 OF 4

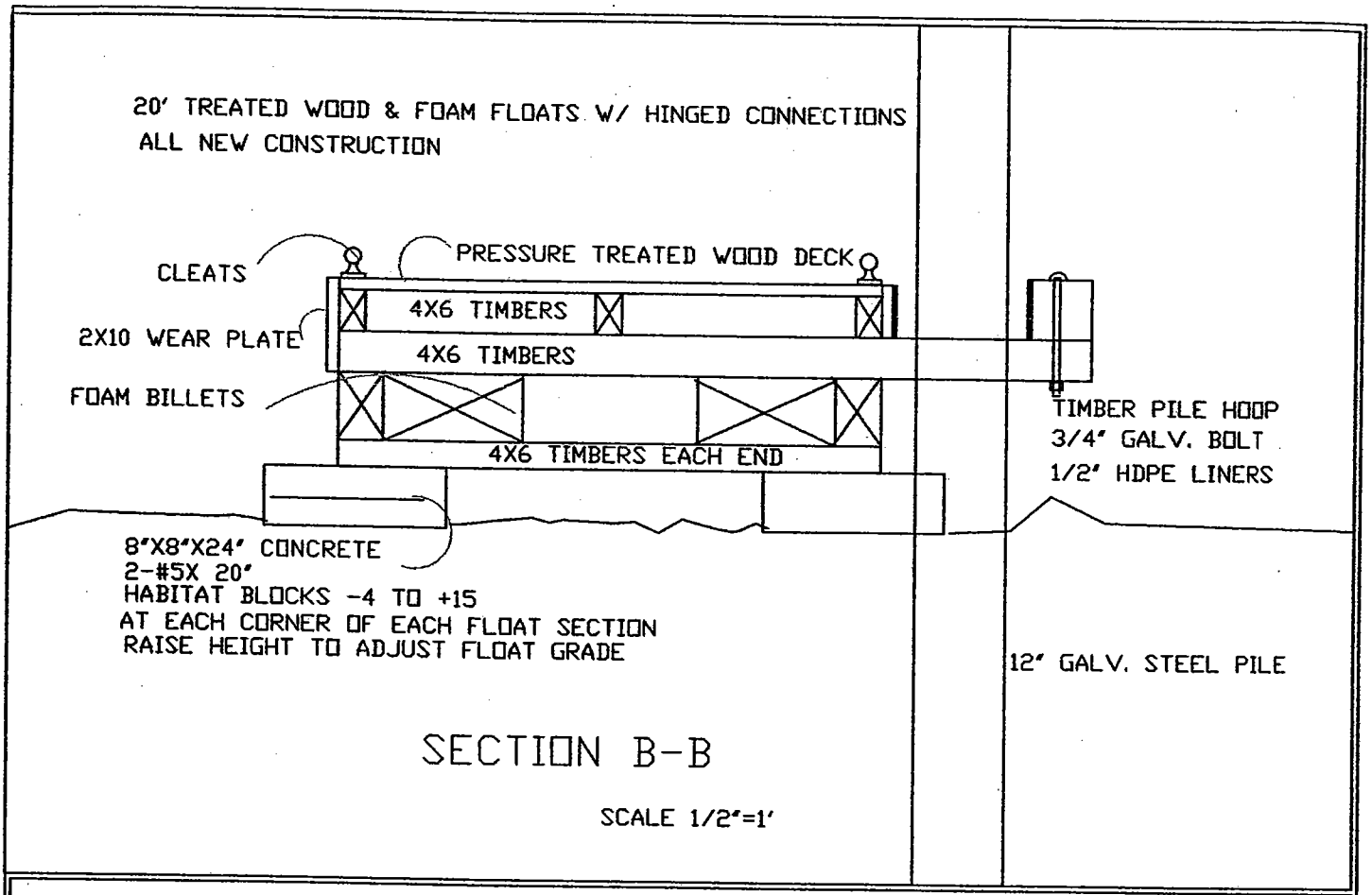

SECTION B-B

SCALE 1/2"=1'

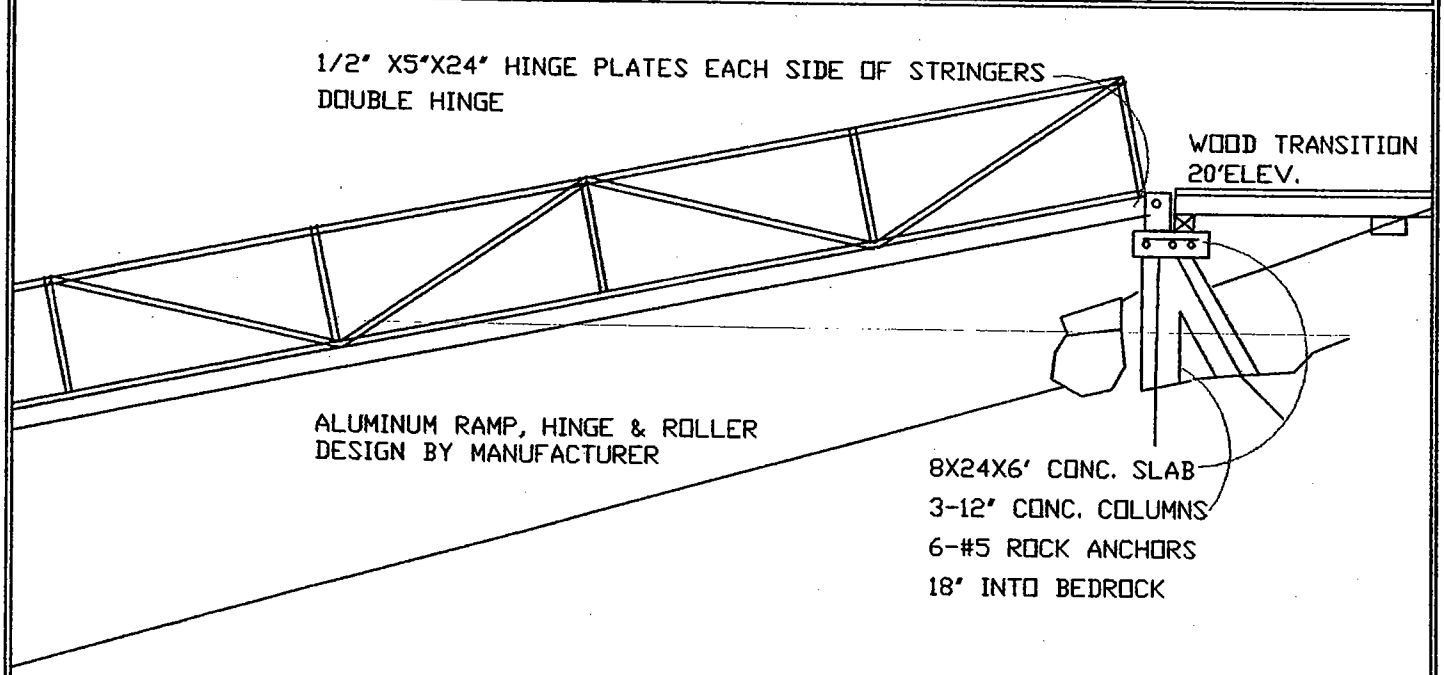

SECTION C-C

SCALE 1"=5'

SEE CONSTRUCTION DRAWINGS FOR DETAILS

FRANK H. MURKOWSKI,
GOVERNOR

STATE OF ALASKA

OFFICE OF THE GOVERNOR

DEPARTMENT OF NATURAL RESOURCES
OFFICE OF PROJECT MANAGEMENT AND PERMITTING

OFFICE OF PROJECT MANAGEMENT AND PERMITTING
302 GOLD STREET, SUITE 202
JUNEAU, ALASKA 99801-1127
PHONE: (907) 465-3562/FAX: (907) 465-3075

NOTICE OF APPLICATION FOR CERTIFICATION OF CONSISTENCY WITH THE ALASKA COASTAL MANAGEMENT PROGRAM

Notice is hereby given that a request is being filed with the Office of Project Management and Permitting for a consistency determination, as provided in Section 307(c)(3) of the Coastal Zone Management Act of 1972, as amended [16 U.S.C. 1456(c)(3)], that the project described in the Corps of Engineers Public Notice No. **POA-2004-1456, Deep Bay,** will comply with the Alaska Coastal Management Program and that the project will be conducted in a manner consistent with that program.

This project is being reviewed for consistency with the Alaska Coastal Management Program. Written comments about the consistency of the project with the applicable ACMP statewide standards and district policies must be submitted to the Office of Project Management and Permitting. For information about this consistency review, contact OPMP at (907) 269-7470 or (907) 465-3562, or visit the ACMP web site at http://www.gov.state.ak.us/gdc/Projects/projects.html.

Attachment 2

FRANK H. MURKOWSKI, GOVERNOR

STATE OF ALASKA

OFFICE OF THE GOVERNOR

DEPT. OF ENVIRONMENTAL CONSERVATION

DIVISION OF WATER
401 Certification Program
Non-Point Source Water Pollution Control Program

NOTICE OF APPLICATION
FOR
STATE WATER QUALITY CERTIFICATION

Any applicant for a federal license or permit to conduct an activity that might result in a discharge into navigable waters, in accordance with Section 401 of the Clean Water Act of 1977 (PL95-217), also must apply for and obtain certification from the Alaska Department of Environmental Conservation that the discharge will comply with the Clean Water Act, the Alaska Water Quality Standards, and other applicable State laws. By agreement between the U.S. Army Corps of Engineers and the Department of Environmental Conservation, application for a Department of the Army permit to discharge dredged or fill material into navigable waters under Section 404 of the Clean Water Act also may serve as application for State Water Quality Certification.

Notice is hereby given that the application for a Department of the Army Permit described in the Corps of Engineers' Public Notice No. **POA-2004-1456, Deep Bay,** serves as application for State Water Quality Certification from the Department of Environmental Conservation.

After reviewing the application, the Department may certify that there is reasonable assurance that the activity, and any discharge that might result, will comply with the Clean Water Act, the Alaska Water Quality Standards, and other applicable State laws. The Department also may deny or waive certification.

Any person desiring to comment on the project with respect to Water Quality Certification may submit written comments within 30 days of the date of the Corps of Engineer's Public Notice to:

Department of Environmental Conservation
WQM/401 Certification
410 Willoughby Avenue
Juneau, Alaska 99801-1795
Telephone: (907) 465-5321
FAX: (907) 465-5274

Attachment 3