US Army Corps
of Engineers
Alaska District

Public Notice of Application for Permit

Regulatory Branch (1145b)
Post Office Box 6898
Elmendorf AFB, Alaska 99506-6898

PUBLIC NOTICE DATE: 03 February 2005

EXPIRATION DATE: 07 March 2005

REFERENCE NUMBER: POA-2004-1390-4

WATERWAY: WRANGELL NARROWS

***** PARTIAL AFTER-THE-FACT PUBLIC NOTICE*****

Interested parties are hereby notified that an application has been received for a Department of the Army permit for certain work in waters of the United States as described below and shown on the attached plan.

APPLICANT: Mr. James Anderson, Post Office Box 1534, Petersburg, Alaska 99833-1534

AGENT: Mr. Ken Elmore, P.O. Box 371, Petersburg, Alaska 99833, (907) 772-3284

LOCATION: The project site is located at milepost 9.25 Mitkof Highway on Lots 25AC and 25AF within section 2, T. 60 S., R. 79 E., Copper River Meridian, Latitude 56.707° N., Longitude 132.937° W., near Petersburg, Alaska.

WORK: The applicant requests authorization to retain 2,700 cubic yards of fill material, consisting of clean shot rock and gravel, which was placed in 0.54 acre of forested wetlands to construct the following:

1. A 225-foot long by 17.5-foot wide access road (Lot 25AC)
2. An 80-foot by 50-foot house pad and Turn around (Lot 25AC)
3. A 16-foot by 50-foot parking pad (Lot 25AC)
4. A 50-foot long by 23.5-foot wide access road (Lot 25AF)
5. A 160-foot by 70-foot house pad and turnaround (Lot 25AF)

Also, the applicant request authorization to place an additional 681 cubic yards of fill in 0.081 acre of wetlands to construct two water tank base pads, two treatment plant areas, two absorption beds and two wastewater pipe trenches (one each per lot). The applicant further requests authorization to place a beach access road on Lot 25AC and a stacked rock terrace on Lot 25AF.

PURPOSE: To construct two private residences for full-time occupancy by the applicants family members.

WATER QUALITY CERTIFICATION: A permit for the described work will not be issued until a certification or waiver of certification as required under Section 401 of the Clean Water Act (Public Law 95-217), has been received from the Alaska Department of Environmental Conservation.

COASTAL ZONE MANAGEMENT ACT CERTIFICATION: Section 307(c)(3) of the Coastal Zone, Management Act of 1972, as amended by 16 U.S.C. 1456(c)(3), requires the applicant to certify that the described activity affecting land or water uses in the Coastal Zone complies with the Alaska Coastal Management Program. A permit will not be issued until the Office of Project Management and Permitting, Department of Natural Resources has concurred with the applicant's certification.

PUBLIC HEARING: Any person may request, in writing, within the comment period specified in this notice, that a public hearing be held to consider this application. Requests for public hearings shall state, with particularity, reasons for holding a public hearing.

CULTURAL RESOURCES: The latest published version of the Alaska Heritage Resources Survey (AHRS) has been consulted for the presence or absence of historic properties, including those listed in or eligible for inclusion in the National Register of Historic Places. There are no listed or eligible properties in the vicinity of the worksite. Consultation of the AHRS constitutes the extent of cultural resource investigations by the District Engineer at this time, and he is otherwise unaware of the presence of such resources. This application is being coordinated with the State Historic Preservation Office (SHPO). Any comments SHPO may have concerning presently unknown archeological or historic data that may be lost or destroyed by work under the requested permit will be considered in our final assessment of the described work.

TRIBAL CONSULTATION: The Alaska District fully supports tribal self-governance and government-to-government relations between the Federal government and Federally recognized Tribes. This notice invites participation by agencies, Tribes, and members of the public in the Federal decision-making process. In addition, Tribes with protected rights or resources that could be significantly affected by a proposed Federal action (e.g., a permit decision) have the right to consult with the Alaska District on a government-to-government basis. Views of each Tribe regarding protected rights and resources will be accorded due consideration in this process. This Public Notice serves as notification to the Tribes within the area potentially affected by the proposed work and invites their participation in the Federal decision-making process regarding the protected Tribal right or resource. Consultation may be initiated by the affected Tribe upon written request to the District Engineer during the public comment period.

ENDANGERED SPECIES: No threatened or endangered species are known to use the project area. Preliminarily, the described activity will not affect threatened or endangered species, or their critical habitat designated as endangered or threatened, under the Endangered Species Act of 1973 (87 Stat. 844). This application is being coordinated with the U.S. Fish and Wildlife Service and the National Marine Fisheries Service. Any comments they may have concerning endangered or threatened wildlife or plants or their critical habitat will be considered in our final assessment of the described work.

ESSENTIAL FISH HABITAT: The proposed work is being evaluated for possible effects to Essential Fish Habitat (EFH) pursuant to the Magnuson Stevens Fishery Conservation and Management Act of 1996 (MSFCMA), 16 U.S.C. et seq and associated federal regulations found at 50 CFR 600 Subpart K. The Alaska District includes areas of EFH as Fishery Management Plans. We have reviewed the January 20, 1999, North Pacific Fishery Management Council's Environmental Assessment to locate EFH area as identified by the National Marine Fisheries Service (NMFS).

We have determined that the described activity within the proposed area will not adversely affect EFH, including Anadromous fish and federally managed fishery resources.

SPECIAL AREA DESIGNATION: None.

EVALUATION: The decision whether to issue a permit will be based on an evaluation of the probable impacts including cumulative impacts of the proposed activity and

its intended use on the public interest. Evaluation of the probable impacts, which the proposed activity may have on the public interest, requires a careful weighing of all the factors that become relevant in each particular case. The benefits, which reasonably may be expected to accrue from the proposal, must be balanced against its reasonably foreseeable detriments. The decision whether to authorize a proposal, and if so, the conditions under which it will be allowed to occur, are therefore determined by the outcome of the general balancing process. That decision should reflect the national concern for both protection and utilization of important resources. All factors, which may be relevant to the proposal, must be considered including the cumulative effects thereof. Among those are conservation, economics, aesthetics, general environmental concerns, wetlands, cultural values, fish and wildlife values, flood hazards, floodplain values, land use, navigation, shore erosion and accretion, recreation, water supply and conservation, water quality, energy needs, safety, food and fiber production, mineral needs, considerations of property ownership, and, in general, the needs and welfare of the people. For activities involving 404 discharges, a permit will be denied if the discharge that would be authorized by such permit would not comply with the Environmental Protection Agency's 404(b)(1) guidelines. Subject to the preceding sentence and any other applicable guidelines or criteria (see Sections 320.2 and 320.3), a permit will be granted unless the District Engineer determines that it would be contrary to the public interest.

The Corps of Engineers is soliciting comments from the public; Federal, State, and local agencies and officials; Indian Tribes; and other interested parties in order to consider and evaluate the impacts of this proposed activity. Any comments received will be considered by the Corps of Engineers to determine whether to issue, modify, condition or deny a permit for this proposal. To make this decision, comments are used to assess impacts on endangered species, historic properties, water quality, general environmental effects, and the other public interest factors listed above. Comments are used in the preparation of an Environmental Assessment and/or an Environmental Impact Statement pursuant to the National Environmental Policy Act. Comments are also used to determine the need for a public hearing and to determine the overall public interest of the proposed activity.

Comments on the described work, with the reference number, should reach this office no later than the expiration date of this Public Notice to become part of the record and be considered in the decision. Please contact Ms. Serena Sweet at (907) 753-2720, toll free from within Alaska at (800) 478-2712, or by email at serena.e.sweet@poa02.usace.army.mil if further information is desired concerning this notice.

AUTHORITY: This permit will be issued or denied under the following authorities:

(X) Discharge dredged or fill material into waters of the United States - Section 404 Clean Water Act (33 U.S.C. 1344). Therefore, our public interest review will consider the guidelines set forth under Section 404(b) of the Clean Water Act (40 CFR 230).

A plan, Notice of Application for Certification of Consistency with the Alaska Coastal Management Program, and Notice of Application for State Water Quality Certification are attached to this Public Notice.

District Engineer
U.S. Army, Corps of Engineers

Attachment(s)

FRANK H. MURKOWSKI, GOVERNOR

STATE OF ALASKA

OFFICE OF THE GOVERNOR

DEPT. OF ENVIRONMENTAL CONSERVATION

DIVISION OF WATER

401 Certification Program
Non-Point Source Water Pollution Control Program

NOTICE OF APPLICATION FOR STATE WATER QUALITY CERTIFICATION

Any applicant for a federal license or permit to conduct an activity that might result in a discharge into navigable waters, in accordance with Section 401 of the Clean Water Act of 1977 (PL95-217), also must apply for and obtain certification from the Alaska Department of Environmental Conservation that the discharge will comply with the Clean Water Act, the Alaska Water Quality Standards, and other applicable State laws. By agreement between the U.S. Army Corps of Engineers and the Department of Environmental Conservation, application for a Department of the Army permit to discharge dredged or fill material into navigable waters under Section 404 of the Clean Water Act also may serve as application for State Water Quality Certification.

Notice is hereby given that the application for a Department of the Army Permit described in the Corps of Engineers' Public Notice No. **POA-2004-1390-4, Wrangell Narrows,** serves as application for State Water Quality Certification from the Department of Environmental Conservation.

After reviewing the application, the Department may certify that there is reasonable assurance that the activity, and any discharge that might result, will comply with the Clean Water Act, the Alaska Water Quality Standards, and other applicable State laws. The Department also may deny or waive certification.

Any person desiring to comment on the project with respect to Water Quality Certification may submit written comments within 30 days of the date of the Corps of Engineer's Public Notice to:

Department of Environmental Conservation
WQM/401 Certification
410 Willoughby Avenue
Juneau, Alaska 99801-1795
Telephone: (907) 465-5321
FAX: (907) 465-5274

Attachment 2

FRANK H. MURKOWSKI, GOVERNOR

STATE OF ALASKA

OFFICE OF THE GOVERNOR

DEPARTMENT OF NATURAL RESOURCES
OFFICE OF PROJECT MANAGEMNT AND PERMITTING

OFFICE OF PROJECT MANAGEMENT AND PERMITTING
302 GOLD STREET, SUITE 202
JUNEAU, ALASKA 99801-1127
PHONE: (907) 465-3562/FAX: (907) 465-3075

NOTICE OF APPLICATION FOR CERTIFICATION OF CONSISTENCY WITH THE ALASKA COASTAL MANAGEMENT PROGRAM

Notice is hereby given that a request is being filed with the Office of Project Management and Permitting for a consistency determination, as provided in Section 307(c)(3) of the Coastal Zone Management Act of 1972, as amended [16 U.S.C. 1456(c)(3)], that the project described in the Corps of Engineers Public Notice No. **POA-2004-1390-4, Wrangell Narrows,** will comply with the Alaska Coastal Management Program and that the project will be conducted in a manner consistent with that program.

The Office of Project Management and Permitting requests your comments, particularly on the proposed project's consistency with the affected local coastal district management program. For more information on the consistency review contact OPMP at (907) 269-7470 or (907) 465-3562, or visit the ACMP web site at http://www.gov.state.ak.us/gdc/Projects/projects.html.

Attachment 3

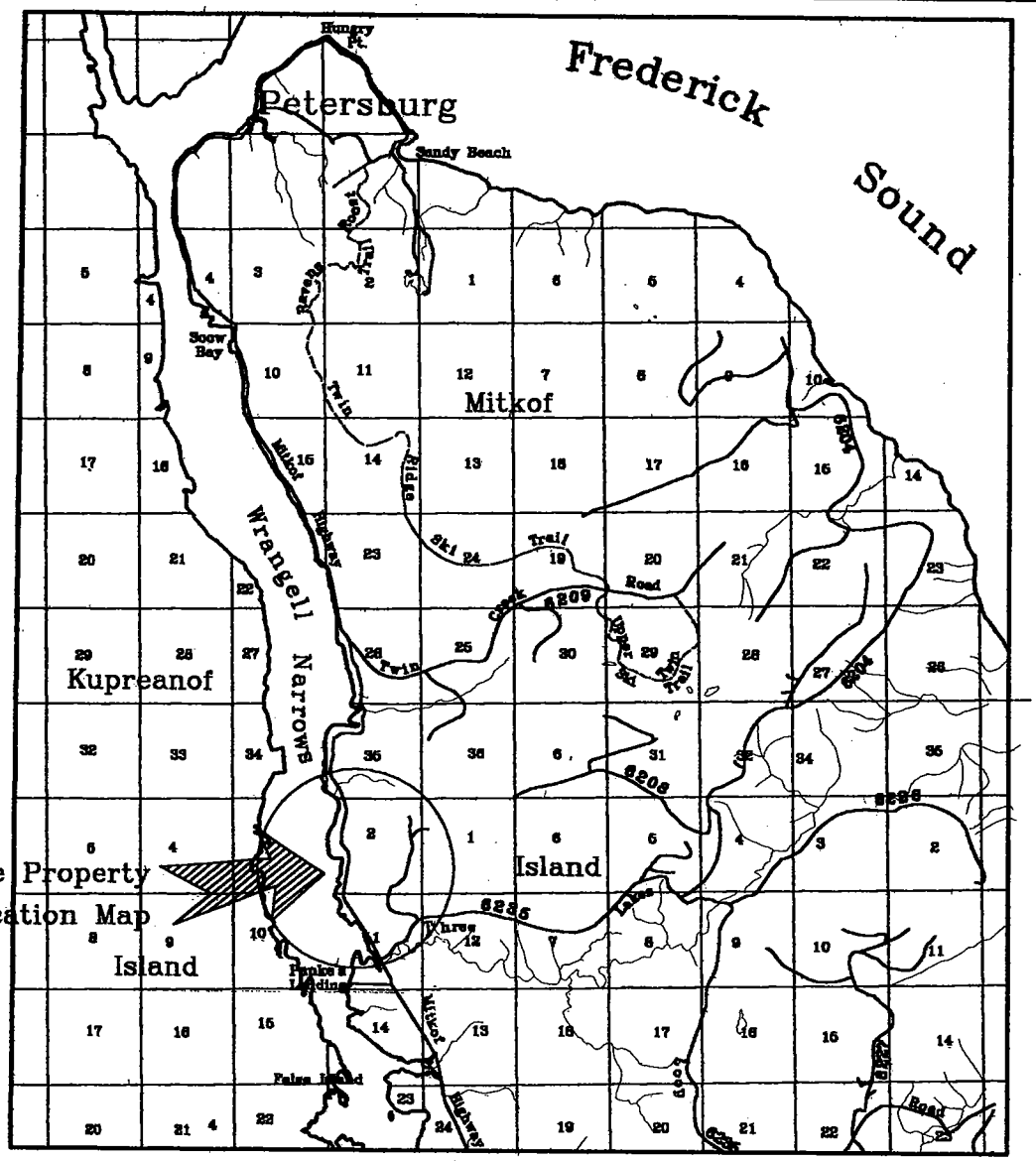

VICINITY MAP: USGS QUAD's, Petersburg C-3, Petersburg D-3

SCALE, IN MILES

0 1 2 3 4

GRAPHIC SCALE – MILES

N

True

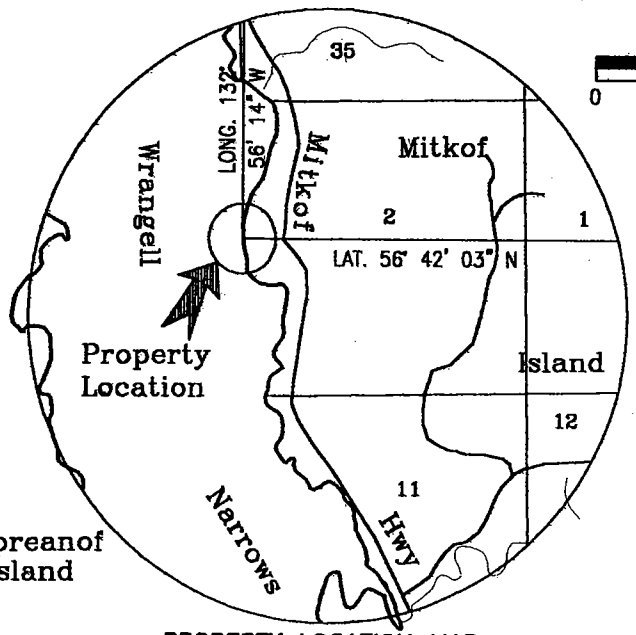

PROPERTY LOCATION MAP

SCALE, IN MILES

0 1/2 1

N

WRANGELL NARROWS:

Project Location: Near Papke's Landing,,
11 Miles South of Petersburg, AK

KENNETH H. ELMORE, P.E.	
P.O. Box 371, Petersburg, AK 99833	
DATE PREPARED: 7-15-2003	APPLICANT: James Anderson

POA-2004-1390-4
Mr. James Anderson
Sheet 1 of 5
Date: July 15, 2003
Wrangell Narrows

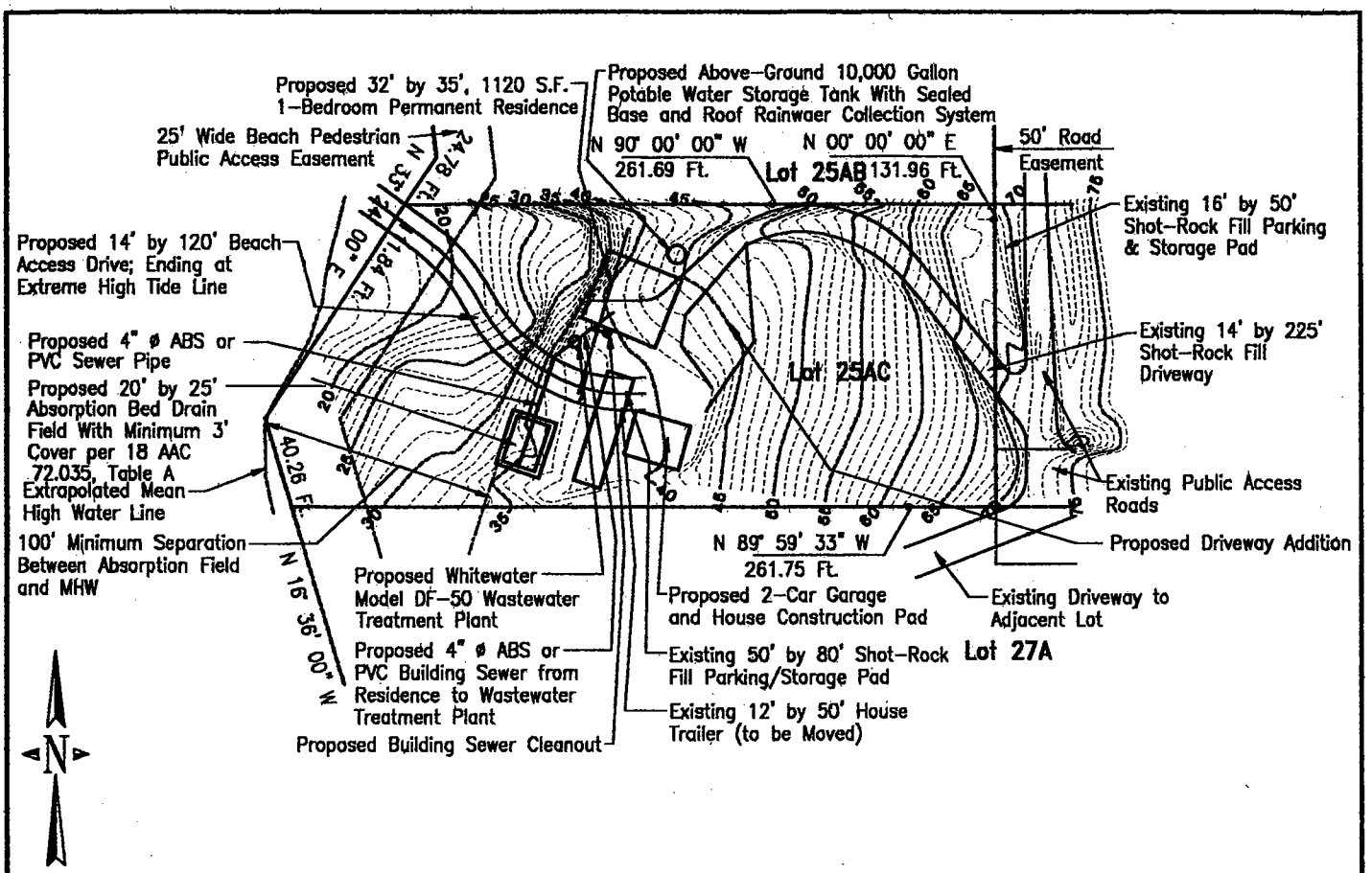

LOT 25AC LOT DEVBELOPMENT AND WASTEWATER SYSTEM PLAN VIEW

0 20 40 60 80 100

GRAPHIC SCALE – FEET (HORIZONTAL)

Elevations Based on High Tide Elevation of +15.6 Ft. Pegged on 6/14/2003 at 2:20 P.M. At Turn of the Tide

PROPERTY LOCATION MAP: USGS QUAD, Petersburg C-3

SCALE, IN MILES

0 1 2

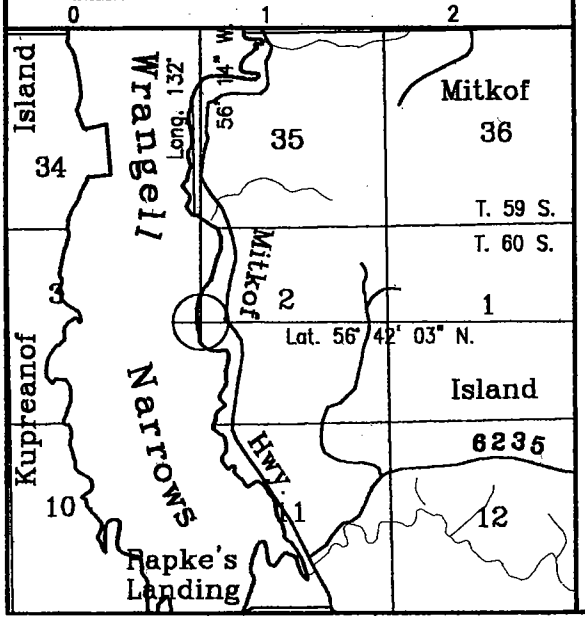

NOTES

1. Purpose: Installation of Residential Wastewater Treatment Plant and Drain Field
2. Property Description: Lot 25AC, within U.S. Survey 2472, Part of Surveyed Section 2, T. 60 S., R. 79 E., C.R.M.
3. Project Location: Near 8.5 Mile Mitkof Highway, Mitkof Island, 8 1/2 Miles South of Petersburg, AK
3. Adjacent Property Owners:
   Lot 25AA: James Walden/Pat Ray, P.O. Box xxx, Petersburg, AK 99833
   Lot 25AB: Alan Otness, P.O. Box 317, Petersburg, AK 99833
   Lot 25AD: Dave Owens, P.O. Box XXX, Petersburg, AK 99833
   Lot 25AE: Trina Ives, P.O. Box XXX, Petersburg, AK 99833
   Lot 25AF: Ja,es Amderson, P.O. Box XXX, Petersburg, AK 99833
   Lot 27A: Laron Martin, P.O. Box XXX, Petersburg, AK 99833
   Lot 26A: Jeff Hupp, P.O. Box 2173, Petersburg, AK 99833

PROJECT NUMBER:
WRANGELL NARROWS:

KENNETH H. ELMORE, P.E.
P.O. Box 371, Petersburg, AK 99833

DATE PREPARED: 07-15-2003	APPLICANT: James Anderson

POA-2004-1390-4
Mr. James Anderson
Sheet 2 of 5
Date: July 15, 2003
Wrangell Narrows

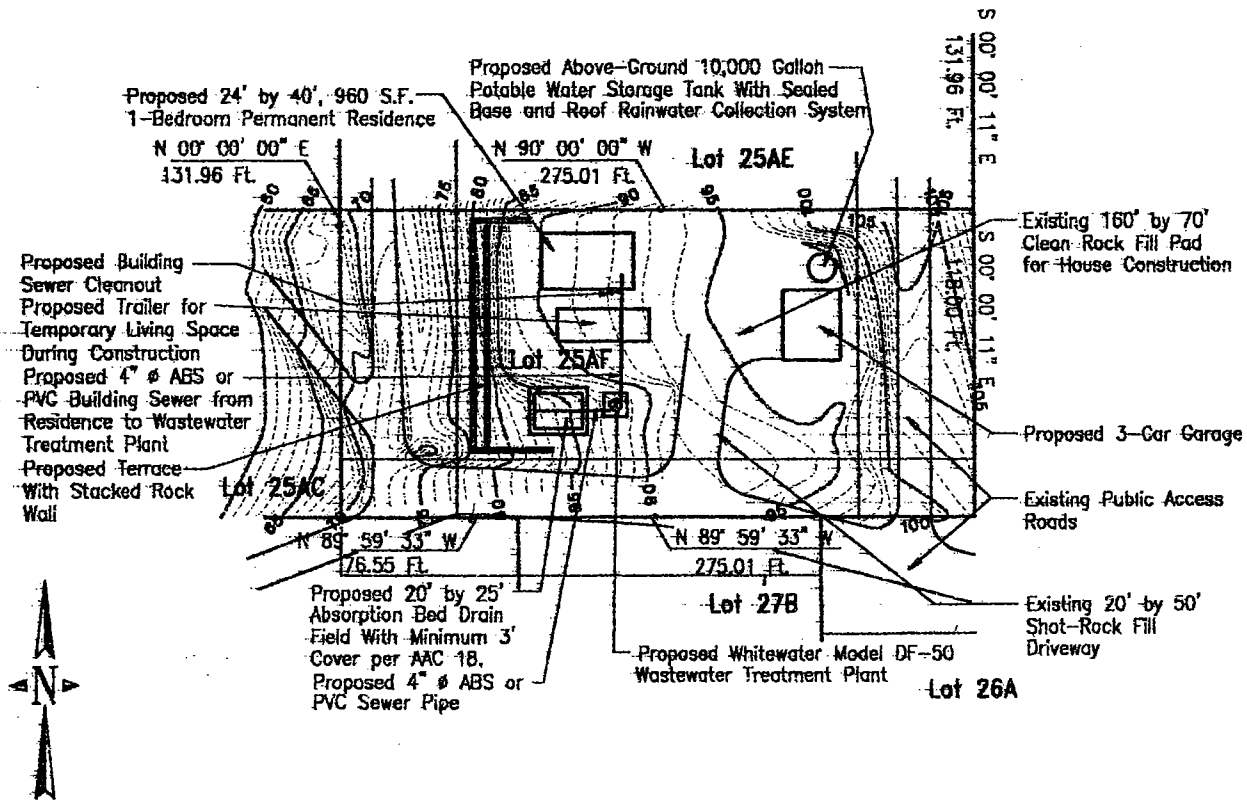

LOT 25AF LOT DEVBELOPMENT AND WASTEWATER SYSTEM PLAN VIEW

0 20 40 60 80 100

GRAPHIC SCALE – FEET (HORIZONTAL)

Elevations Based on High Tide Elevation of +15.6 Ft. Pegged on 6/14/2003 at 2:20 P.M. At Turn of the Tide

PROPERTY LOCATION MAP: USGS QUAD, Petersburg C-3

SCALE, IN MILES

0 1 2

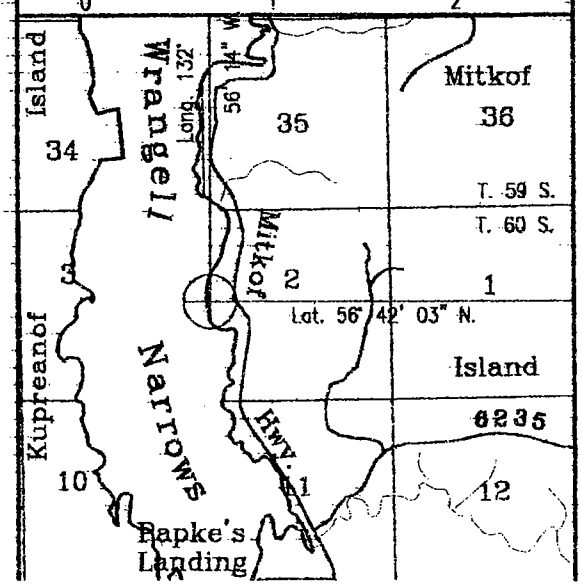

NOTES

1. Purpose: Installation of Residential Wastewater Treatment Plant and Drain Field
2. Property Description: Lot 25AC, within U.S. Survey 2472, Part of Surveyed Section 2, T. 60 S., R. 79 E., C.R.M.
3. Project Location: Near 8.5 Mile Mitkof Highway, Mitkof Island, 8 1/2 Miles South of Petersburg, AK
3. Adjacent Property Owners:
   Lot 25AA: James Walden/Pat Ray, P.O. Box xxx, Petersburg, AK 99833
   Lot 25AB: Alan Otness, P.O. Box 317, Petersburg, AK 99833
   Lot 25AD: Dave Owens, P.O. Box XXX, Petersburg, AK 99833
   Lot 25AE: Trina Ives, P.O. Box XXX, Petersburg, AK 99833
   Lot 25AF: Ja,es Amderson, P.O. Box XXX, Petersburg, AK 99833
   Lot 27A: Laron Martin, P.O. Box XXX, Petersburg, AK 99833
   Lot 26A: Jeff Hupp, P.O. Box 2173, Petersburg, AK 99833

PROJECT NUMBER:
WRANGELL NARROWS:

KENNETH H. ELMORE, P.E.
P.O. Box 371, Petersburg, AK 99833

DATE PREPARED: 07-15-2003	APPLICANT: James Anderson

POA-2004-1390-4
Mr. James Anderson
Sheet 3 of 5
Date: July 15, 2003
Wrangell Narrows

FILL MATERIAL DISCHARGES, VOLUMES, AND AREAS OF IMPACT				
DISCHARGE	TYPE OF MATERIAL	DIMENSIONS	VOLUMES	AREA OF IMPACT
Lot 25AC House Access Road Existing Development)	Clean Shot Rock and Gravel	225 Ft. x 17.5 Ft. x 3 Ft.	438 Cubic Yards	0.090 Acres
Lot 25AC House Pad& Turnaround (Existing Development)	Clean Shot Rock and Gravel	80 Ft. x 50 Ft. x 2.5 Ft.	370 Cubic Yards	0.092 Acres
Lot 25AC Parking Pad (Existing Development)	Clean Shot Rock and Gravel	16 Ft. x 50 Ft. x 4 Ft.	119 Cubic Yards	0.018 Acres
Lot 25AF House Access Driveway (Existing Development)	Clean Shot Rock and Gravel	50 Ft. x 23.5 Ft. x 3 Ft.	131 Cubic Yards	0.027 Acres
Lot 25AF House Pad & Turnaround (Existing Development)	Clean Shot Rock and Gravel	160 Ft. x 70 Ft. x 3 Ft. + 80 Ft. x 30 Ft. x 4.5 Ft.	1,245 Cubic Yards+ 400 Cubic Yards	0.257Acres + 0.056 Acres
Lot 25AC Water Tank Base Fill	Clean Shot Rock Clean Pea Gravel	16 Ft. Dia. x 1 1/2 Ft. 14 Ft. Dia. x 1/2 Ft.	11 Cubic Yards 3 Cubic Yards	0.005 Acres
Lot 25AC Treatment Plant Fill	Clean Pea Gravel Clean Pea Gravel	12 Ft. Dia. x 6 Ft. – 6 Ft. Dia. x 5 Ft.	20 Cubic Yards	0.004 Acres
Lot 25AC Mound and Absorption Bed	Clean Drain Gravel Clean Medium Sand Clean Topsoil	25 Ft. x 20 Ft. x 2 Ft. 25 Ft. x 3.5 Ft./2 x 20 Ft. 25 Ft. x 20 Ft. x 2 Ft.	37 Cubic Yards 65 Cubic Yards 37 Cubic Yards	0.012 Acres
Lot 25AC Wastewater Pipe Trenches	Clean Pea Gravel Clean Topsoil	75 Ft. x 1 Ft. x 1.33 Ft. 75 Ft. x 1 Ft. x 2 Ft.	4 Cubic Yards 6 Cubic Yards	0.002 Acres
Lot 25AC Beach Access Road	Clean Shot Rock and Gravel	20 Ft. x 75 Ft. x 3.5 Ft.	194 Cubic Yards	0.035 Acres
Lot 25AF Water Tank Base Fill	Clean Shot Rock Clean Pea Gravel	16 Ft. Dia. x 1 1/2 Ft. 14 Ft. Dia. x 1/2 Ft.	11 Cubic Yards 3 Cubic Yards	0.005 Acres
Lot 25AF Treatment Plant Fill	Clean Pea Gravel Clean Pea Gravel	12 Ft. Dia. x 6 Ft. – 6 Ft. Dia. x 5 Ft.	20 Cubic Yards	0.004 Acres
Lot 25AF Absorption Bed	Clean Drain Gravel Clean Medium Sand Clean Topsoil	25 Ft. x 20 Ft. x 2 Ft. 25 Ft. x 3.5 Ft./2 x 20 Ft. 25 Ft. x 20 Ft. x 2 Ft.	37 Cubic Yards 65 Cubic Yards 37 Cubic Yards	0.012 Acres
Lot 25AF Wastewater Pipe Trenches	Clean Pea Gravel Clean Topsoil	75 Ft. x 1 Ft. x 1.33 Ft. 75 Ft. x 1 Ft. x 2 Ft.	4 Cubic Yards 6 Cubic Yards	0.002 Acres
Lot 25AF Stacked Rock Terrace	Clean Large Rock Riprap	(100 Ft. + 20 Ft. + 35 Ft.) x 1.5 Ft. x 14 Ft.	121 Cubic Yards	
TOTALS:	Clean Shot Rock & Clean Pea Gravel Clean Sand Clean Topsoil Clean Rock Riprap	Gravel	2,919 Cubic Yards 125 Cubic Yards 130 Cubic Yards 86 Cubic Yards 121 Cubic Yards	LOT 25AC: 0.258 Acres LOT 25AF: 0.363 Acres

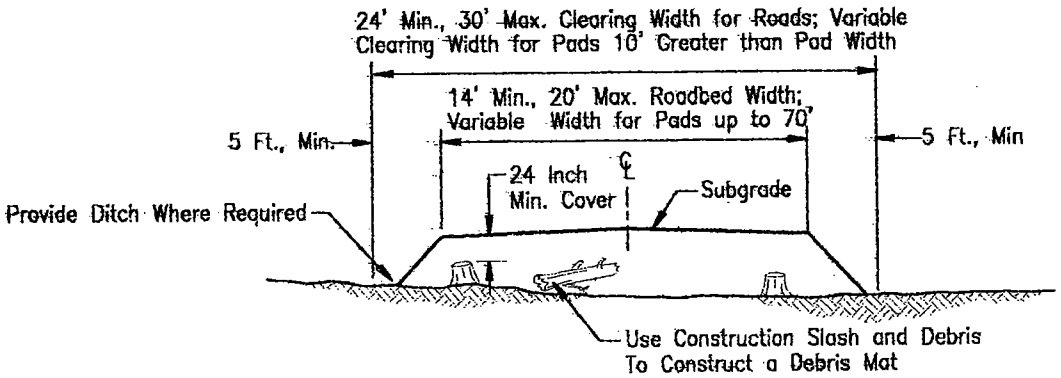

Stumps, Construction Slash, and Debis Not Used as a Mat Shall Be Removed From Property Lot and Disposed of in Contractor's Rock Pit

TYPICAL ROCK OVERLAY SECTION

Not To Scale

KENNETH H. ELMORE, P.E.
P.O. Box 371, Petersburg, AK 99833

DATE PREPARED: 07-15-2003	APPLICANT: James Anderson

POA-2004-1390-4
Mr. James Anderson
Sheet 4 of 5
Date: July 15, 2003
Wrangell Narrows

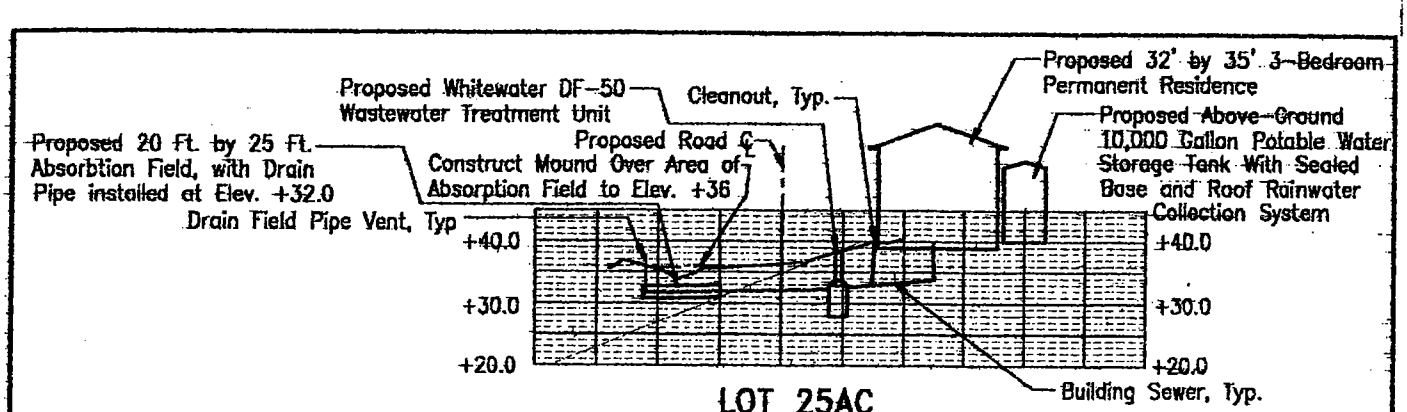

LOT 25AC
WASTEWATER SYSTEM PROFILE VIEW

Vertical Scale Exaggerated by Factor of 2.0
Relative to Horizontal Scale

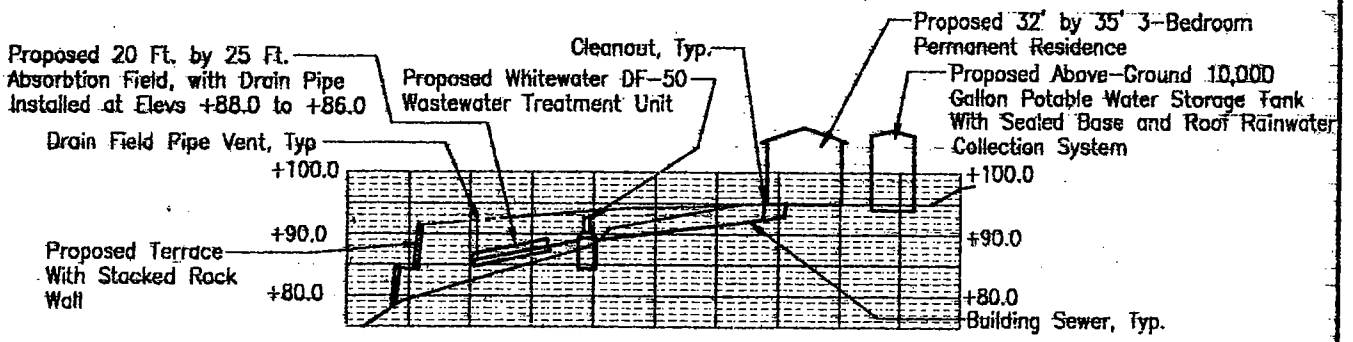

LOT 25AF
WASTEWATER SYSTEM PROFILE VIEW

Vertical Scale Exaggerated by Factor of 2.0
Relative to Horizontal Scale

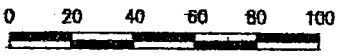

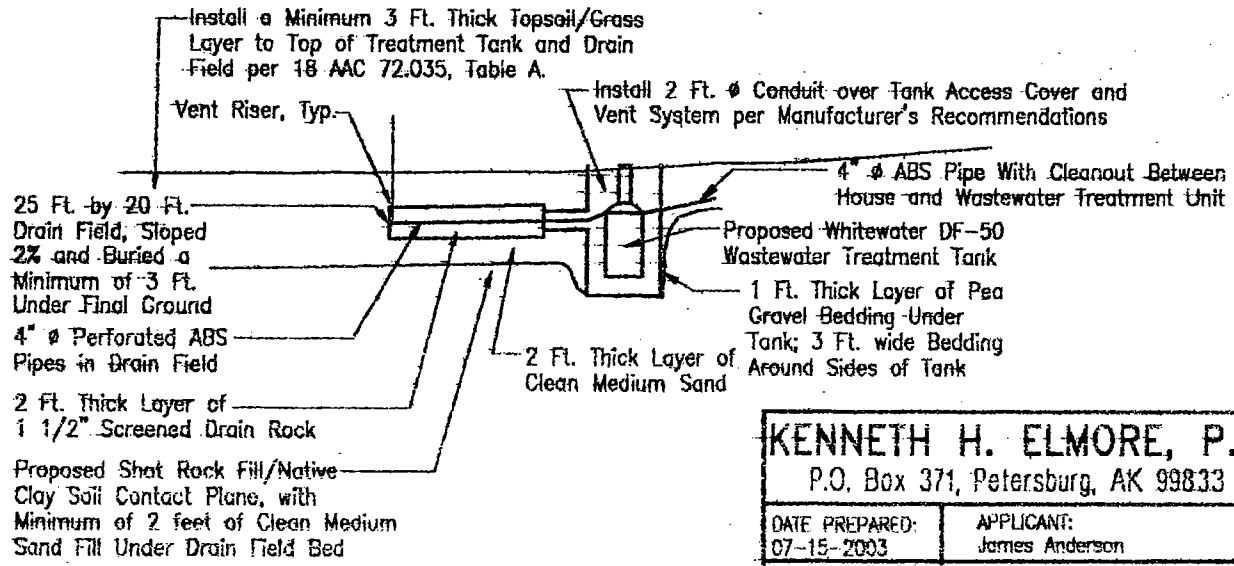

WASTEWATER TANK/DRAIN FIELD PROFILE VIEW

Vertical Scale Exaggerated by Factor of 2.0
Relative to Horizontal Scale

KENNETH H. ELMORE, P.E.
P.O. Box 371, Petersburg, AK 99833

DATE PREPARED: 07-15-2003	APPLICANT: James Anderson

POA-2004-1390-4
Mr. James Anderson
Sheet 5 of 5
Date: July 15, 2003
Wrangell Narrows