US Army Corps
of Engineers
Alaska District

Public Notice of Application for Permit

Regulatory Branch (1145b)
Post Office Box 898
Anchorage, Alaska 99506-0898

PUBLIC NOTICE DATE: 9 APRIL 2004

EXPIRATION DATE: 10 MAY 2004

REFERENCE NUMBER: POA-2004-253-2

WATERWAY NUMBER: Colville River

Interested parties are hereby notified that an application has been received for a Department of the Army (DA) permit for certain work in waters of the United States as described below and shown on the attached plan.

APPLICANT: ConocoPhillips Alaska, Inc. (CPAI), Post Office Box 100360, Anchorage, Alaska 99510-0360. Point of Contact: Ms. Alice Bullington, WNS Permitting Team Lead, telephone (907) 263-4206; FAX (907) 265-1515.

PROPOSED WORK: CPAI has proposed to construct 5 new satellites (drill pads) and associated roads. Two satellites would be located in the Colville Delta (CD) and three satellites would be within the National Petroleum Reserve-Alaska (NPR-A). The project would require the placement of approximately 1,988,660 cubic yards of gravel fill material into approximately 294 acres of waters of the United States (U.S.), including wetlands, to construct five drill pads; a 3.6 mile-long access road from CD-2 to CD-4; a 22 mile-long road (NPR-A Access Road) that would begin at CD-2 on the east side of the Nigliq Channel and terminate at proposed CD-7; access roads from CD-5 and CD-6 to the NPR-A Access Road; an airstrip, floating boat dock and a dock access road at CD-3; and a boat ramp and boat ramp access road at CD-4. The NPR-A Access Road would include a 1200-foot-long bridge over the Nigliq Channel of the Colville River, a 120-foot-long bridge over the Ublutuoch (Tinmiaqsiugvik) River, an 80-foot-long bridge, four 40-foot-long bridges, and four culvert batteries. The project also includes a 65-acre gravel mine at the Clover exploration site. Additionally, the applicant has proposed to use the existing previously permitted Arctic Slope Regional Corporation (ASRC) gravel mine as the primary gravel source (27-acre impact).

LOCATION: The proposed Alpine Satellite Development Program (ASDP) projects are located in the North Slope Borough, Alaska, Colville River Delta, and the northeastern-most part of the National Petroleum Reserve - Alaska (NPR-A). Specific locations are shown on Table 1 - Location Information (attached).

WETLANDS IMPACTS: The total impacts to wetlands and other waters of the U.S. from the proposed project are summarized on Table 2 - Footprint Information (attached).

PURPOSE: The primary purpose of the proposed action is to produce hydrocarbons from satellite reservoirs in the Colville River Unit and NPR-A for commercial sale.

CD-3 SATELLITE (formerly called CD-North or Fiord): This proposed site is located within the Colville Delta approximately 5 miles north of the existing Alpine Central Processing Facility (CPF) and would include the drill site pad, airstrip

with apron and taxiway, access road between the pad and airstrip, floating boat launch and a boat launch access road. An emergency generator will be placed on the pad along with warm and cold storage buildings and an emergency living quarters module. Also included is an additional products pipeline to transport diesel and other products from CD1 to CD3. A power line from CD1 to CD3 would be placed in a cable tray located on the pipeline Vertical Support Members (VSM).

Refer to following drawings (attached)
001 - Vicinity Map (ASDP)
002 - Location Map (ASDP)
003 - Overview (ASDP)
004 - Overview Alpine Processing Facility (APF) (APF to CD-3)
010 - Plan view - Pad Footprint (Detail)
011 - Plan view - Pad, Access Road and Airstrip
015 - Typical Section - Pipe Section
018 - Key Map - Pipeline Route APF to CD-3
019 - Sheet 1, Pipeline Route
020 - Sheet 2, Pipeline Route (Sakoonang Channel crossing)
021 - Sheet 3, Pipeline Route (Tamayagiaq Channel crossing)
022 - Sheet 4, Pipeline Route (Ulamnigiaq Channel crossing)
023 - Plan and Cross Section view - Pipeline Bridge Crossing Sakoonang Channel
024 - Plan and Section view - Pipeline Bridge Crossing Tamayagiaq Channel
025 - Plan and Section view - Pipeline Bridge Crossing Ulamnigiaq Channel
026 - Typical Abutment Foundation Elevation
046 - Typical Cross Sections (Pad, Airstrip, Taxiway, and Apron Access Road)
070 - Boat Launch (Detail)

CD-3 Drill Pad: The proposed pad would have a surface area of approximately 13 acres and would be constructed to be above a 200-year return flood event (Q_{200}) plus freeboard (1 foot) and has been designed to meet the thermal criteria. The pad would be oriented parallel to the prevailing wind direction to minimize snow accumulation on the drilling pad. The proposed top of pad elevation would be 13 feet British Petroleum Mean Sea Level (BPMSL) with 2H:1V slope. The pad site would be located approximately 200 feet from the surrounding water bodies.

Side-slope protection (4 cubic yard sandbags, 12-inch minus riprap, geotextile revetment, etc.) would be appropriately placed to protect the facilities from erosion that might result from high-water events including wind/wave run-up, storm surge and break up flooding.

CD-3 Airstrip and Access Road: Access to CD-3 would be provided by an approximately 3,670-foot-long and 170-foot-wide (toe-to-toe) gravel airstrip and a 0.4-mile access road between the airstrip and drill pad. The airstrip would accommodate fixed-wing aircrafts (Casa and Otter) or helicopter. The proposed top of road and airstrip elevation would be 13 feet BPMSL with 2H:1V slope with a finished elevation above a 200-year return flood event (Q_{200}) plus freeboard (1 foot) and has been designed to accommodate storm surge. The access road and airstrip would be built with 2H:1V side slopes and include drainage structures with erosion, scour, vortex and side-slope protection that would be incorporated in appropriate areas.

CD-3 Floating Dock and Dock Access Road (Spill Response): Access to the dock would be provided by a 200-foot-long by 40-foot-wide (toe-to-toe) secondary access road. An 8-foot-wide by 50-foot-long 2-pile gangway would provide water access. The gangway would be removed/deployed by a 966 loader. The dock access road would not have culverts. BPMSL elevations, exact locations to be armored, and a detailed drawing of the docking structure are not available at this time. Surveys by the applicant are to be performed this summer (2004).

Side-slope Protection: Sandbags, geotextile or rip rap would be used for side-slope protection as appropriate to protect the facilities from erosion that might result from high water events including wind/wave run-up, storm surge, and break-up flooding.

CD-3 Pipeline: This new pipeline corridor would extend approximately 5.8 miles south on new VSMs to Alpine CPF. The route follows naturally occurring higher ground, minimized water crossings, and avoids some of the larger channels of the Colville River. The pipeline would be constructed on a 55-foot spacing between VSMs.

Pipeline Bridges: The bridges on the Ulamnigiaq (600 feet), Tamayayak (690 feet) and the Sakoonang (455 feet) would be pipeline bridges only. Each bridge would have one in-stream pier with an ice-breaking cone on the up-stream side.

CD-3 Drilling Schedule: Up to 32 wells would be drilled from the gravel pad. The applicant has proposed a winter drilling program to avoid impacts to wildlife and subsistence activities during summer months. This program would require a minimum of 100 days per season and would allow access by ice road for emergency relief well purposes. Before break-up, the drilling rig would be transported to other sites for use during the summer. It would require 5-7 winter drilling seasons from December until May to complete the development program at CD-3.

CD-4 SATELLITE (formerly called CD-South or Nanuq): This proposed site is located within the Colville Delta approximately 5 miles north of the Village of Nuiqsut and 4 miles south of the Alpine CPF and would include a drill site pad, access road from the pad to CD-1, and a boat ramp with access road. A power line from CD1 to CD4 would be placed in a cable tray located on the pipeline VSMs.

Refer to following drawings (attached)
001 - Vicinity Map (ASDP)
002 - Location Map (ASDP)
003 - Overview (ASDP)
005 - Overview (APF to CD-4)
012 - Plan view - Pad Footprint(Detail)
013 - Plan view - Pad, Access Road, and Boat Ramp
016 - Typical Section - Pipe Section (CD-4 and Existing Alpine Sales Line)
027 - Key Map - Pipeline Route APF to CD-4
028 - Sheet 1, Road and Pipeline Route at APF
029 - Sheet 2, Road and Pipeline Route
030 - Sheet 3, Road and Pipeline at CD-4
047 - Typical Cross Sections (Pad and Roadway)
057 - Typical Cross Section - Lake Passage Roadway
058 - Plan and Profile View - Lake Crossing Culverts
059 - Lake Crossing Culverts (Cross Flow and Fish Passage Pipe Sections)
071 - Boat Launch and Boat Launch Access Road (Detail Plan and Section)

CD-4 Drill Pad: The proposed pad would have a surface area of approximately 9 acres and would be constructed to be above a 200-year return flood event (Q_{200}) plus freeboard (1 foot). The proposed top of pad elevation is 20 feet BPMSL with 2H:1V slope. The pad would be oriented parallel to the prevailing wind direction to minimize snow accumulation on the drilling pad. The pad site would be located approximately 130 feet from the nearest surrounding water body and more than 1,000 feet from subsistence fish camps on the Nigliq Channel.

Access Road (CD-4 to Alpine CPF): The proposed gravel road would be 3.6 miles long and have a 32-foot-wide driving surface with 2.0 horizontal to 1.0 vertical side slopes (2H:1V). The finished road elevation would be constructed to be above a 50-year return flood event (Q_{50}) plus freeboard (3 feet). Drainage structures with erosion, scour, vortex and side-slope protection would be incorporated in appropriate areas. The road alignment follows a naturally occurring ridge spanning 80% of the route from the drill pad to the CD-2 access road. The remaining 20% is located on discontinuous sections of the ridge that maintains, though not as prominently, separation of the Nigliq and Sakoonang Channels. The road alignment has been revised to eliminate the crossing of a paleochannel. A causeway with culverts would be constructed between the western and eastern half of Lake L9323. The applicant has stated that: (1) a culvert crossing at Lake L9323 is a lower cost alternative that would still allow for fish passage and adequate drainage; and, (2) causeway side slopes would be shallow enough that grading should not push gravel into the lake. Details on installation, maintenance, and removal at abandonment for this crossing are not available at this time.

CD-4 Boat Launch and Launch Access Road (Spill Response): Access to the concrete boat launch would be provided by a 1,500-foot-long by 40-foot-wide (toe-to-toe) secondary access road. A 22-foot-wide by 130-foot-long concrete boat launch would provide water access. The dock access road would have culverts and scour protection as required. The applicant has stated that downstream side would not have armoring because of the minimal current in the area. BPMSL elevations, exact locations to be armored, and a detailed drawing of the docking structure are not available at this time. Surveys by the applicant are to be performed this summer (2004).

Side-slope Protection: Sandbags, geotextile or rip rap would be used for side-slope protection as appropriate to protect the facilities from erosion that might result from high water events including wind/wave run-up, storm surge and break up flooding.

CD-4 Pipeline: These lines would proceed east from the drilling pad for approximately 0.4 miles, then north parallel to and 10-feet west of the existing sales oil pipeline to Alpine CPF. The existing sales oil pipeline was constructed with a 65-foot spacing between VSMs. The pipeline to CD-4 would parallel the existing sales pipeline, both in height and VSM placement, so it would not impede caribou movement.

CD-4 Drilling Schedule: The CD-4 development-drilling program would consist of up to 32 wells. The wells would be drilled in the summer, most likely sharing the rig that drills CD-3.

CD-5 SATELLITE (formerly called Alpine West): This proposed site is located approximately 6 miles southwest of the Alpine CPF and would consist of an approximately 9-acre drill pad and a 0.1-mile-long spur road from the pad to the NPR-A Access Road. A power line from CD-1 to CD-5 would be placed in a cable tray located on the pipeline VSMs. CD-5 is outside of the Colville River Delta and providing flood-related design features for public notice purposes (as described for CD-3 and CD-4) are not as critical.

Refer to following drawings (attached)

001 - Vicinity Map (ASDP)
002 - Location Map (ASDP)
003 - Overview (ASDP)
006 - Overview (CD-2 to CD-5)
014 - Plan view - Pad (typical)
017 - Section view - Pipe Section
048 - Cross Section - Pad and Access Road

CD-6 SATELLITE (formerly called Lookout): This proposed site is approximately 15 miles southwest of the Alpine CPF and would consist of an approximately 9-acre drill pad and a 0.4-mile-long spur road from the pad to the NPR-A Access Road. CD-6 will include on site power generation and a backup generator. CD-6 is outside of the Colville River Delta and providing flood-related design features for public notice purposes (as described for CD-3 and CD-4) are not as critical.
Refer to following drawings (attached)
007 - Overview (CD-2 to CD-6)
014 - Plan view - Pad (typical)
017 - Section view - Pipe Section
048 - Cross Section - Pad and Access Road

CD-7 SATELLITE (formerly called Spark): This proposed site is approximately 20 miles southwest of the Alpine CPF and would consist of an approximately 9-acre drill pad. A power line from CD-6 to CD-7 would be placed in a cable tray located on the pipeline VSMs. CD-7 is outside of the Colville River Delta and providing flood-related design features for public notice purposes (as described for CD-3 and CD-4) are not as critical.
Refer to following drawings (attached)
008 - Overview (CD-6 to CD-7)
014 - Plan view - Pad (typical)
017 - Section view - Pipe Section
048 - Cross Section - Pad and Access Road

NPR-A Access Road:
Refer to following drawings (attached)
031 - Key Map Road and Pipeline Route (APF to CD-7)
032 - Road and Pipeline Route, CD-2 to CD-5 (1200-Foot Nigliq Channel Bridge)
033 - Road and Pipeline Route, CD-2 to CD-5 (80-Foot Bridge)
034 - Road and Pipeline Route, CD-5
035 - Road and Pipeline Route, CD-5 to CD 6 (Culvert Battery and 40-Foot Bridge)
036 - Road and Pipeline Route, CD-5 to CD-6 (120-Foot Ublutuoch River Bridge)
037 - Road and Pipeline Route, CD-5 to CD-6 (Culvert Battery and 40-Foot Bridge)
038 - Road and Pipeline Route, CD-5 to CD-6 (Culvert Battery)
039 - Road and Pipeline Route, CD-5 to CD-6
040 - Road and Pipeline Route, CD-6 (40-Foot Bridge)
041 - Road and Pipeline Route, CD-6 to CD-7
042 - Road and Pipeline Route, CD-6 to CD-7
043 - Road and Pipeline Route, CD-6 to CD-7
044 - Road and Pipeline Route, CD-6 to CD-7 (40-Foot Bridge)
045 - Road and Pipeline Route, CD-7
049 - Nigliq Channel Bridge (1200 Foot), Plan and Elevation
050 - Nigliq Channel Bridge - Ice-Breaking Pier, Plan and Elevation
051 - Typical short Crossing Heavy Duty Bridge Section
052 - 40-Foot Heavy Duty Bridge, Plan and Elevation
053 - 80-Foot Heavy Duty Bridge, Plan and Elevation
054 - 120-Foot Heavy Duty Bridge, Plan and Elevation
055 - Roadway Cross-Sections - Typical Fish Passage Culvert
056 - Roadway Cross-Sections - Typical Non-Fish Passage Culvert
060 - Roadway Cross-Sections - Typical Cross Drainage Culvert

The approximately 22-mile-long road would provide access to CD-5, CD-6, and CD-7. It would begin on the east side of the Nigliq Channel at the existing CD-2 Drill Site and terminate at the proposed CD-7 drill site in the NPR-A with spur roads off of this road to CD-5 and CD-6. The NPR-A Access Road and the spur roads to CD-5 and CD-6 would have a crown width of 32 feet, minimum base width of 53 feet and have a minimum gravel thickness of 5 feet with 2:1 side slopes. The road alignments would avoid water bodies, routing 200 feet or more from them where

possible. Culverts or bridges have been proposed to maintain fish passage where needed. Bridges have been proposed at the Nigliq Channel, the Ublutuoch River, and several smaller unnamed drainages. In erosion-prone areas, roads would be armored using riprap, articulated concrete mat, or sandbags.

BRIDGES/CULVERTS (NPR-A Access and Spur Roads): To protect against scour and bank migration, bridge abutments would be armored and piles set deep enough so that the structures would remain stable during the design scour event. Bridge structural design account for the higher-magnitude, less frequent floods, and slope-protection armor would protect against the more frequent, lower-magnitude floods.

- The Nigliq Channel Bridge would be a 1200-foot long box girder style structure located west of CD2. The bridge is designed to carry vehicle traffic and pipelines. Pipelines would be placed on the downstream side of the bridge for protection from break-up ice. Bridge height is designed so the bottom of the bridge structure would maintain a 20-foot space above normal summer water levels in the channel.

- An 80-foot box girder bridge would be located west of the Nigliq Channel Bridge to cross a system of small-elongated lakes. This 80-foot bridge will have one central pier.

- Ublutuoch River Bridge would be a 120-foot long box girder bridge with one central pier.

- Four 40-foot box girder bridges will be located at several locations along the NPR-A access road. These 40-foot bridges will have not have any piers in the channels. Additional drawings of the 40-foot-bridge locations have not been provided at this time because detailed topographic information on these crossings is not available. The applicant has stated that hydrological surveys are scheduled during 2004 and field surveys would be performed in the future.

- Four culvert batteries would be installed at locations with flow velocities of 230 cfs or less. The culverts will be structural steel pipe culverts and will range from 24 inches to 60 inches in diameter depending on the hydrological characteristics and need for fish passage at each area. Each culvert battery will have up to three culverts. The armor would be 4 cubic yard sandbags or 12-inch minus rip rap from the mine near Atigun Pass whichever would be appropriate for the location. All footprints include additional side-slope protection and the side-slope protection has been included in total wetlands impacts. The applicant has not provided additional drawings of culvert battery locations at this time because detailed topographic information on these crossing locations are not available. The applicant has stated that hydrological surveys are scheduled during 2004 and field surveys would be performed in the future.

- Road Culverts: Cross drainage culverts would be place in the roads to maintain natural surface drainage patterns. Exact placement would be determined during final design using (1) using aerial photography; and, (2) site inspections by the design engineers during break-up. The majority of the culverts would be installed prior to break-up but additional culverts would be placed after break-up as site-specific needs are further assessed. Generally, a culvert would be placed every 1000 feet along the road to allow cross drainage. Scour protection would be placed at culverts depending upon the localized hydrologic criteria.

PIPELINES: Pipelines would be located 350 to 1,000 feet from roads where possible. New pipeline VSMs for sections parallel to existing pipelines are aligned to match existing VSMs where possible, to avoid a picket-fence effect.

New pipelines would be designed with a muted (non-shiny) coating to avoid bright flashes from sunlight that may frighten caribou. New pipelines would be constructed so the bottom of the pipe is at least 7 feet above the tundra measured at VSMs, and more in some places depending on topography. In the NPR-A, pipelines were designed to be upstream from the roads so that roads would serve as a containment barrier in the event of a pipeline spill. The exception is in the Colville River Delta where the pipeline would be on the downstream side of the bridges to protect the pipeline from ice. In the Colville Delta, pipelines have been designed to withstand a 200-year (Q_{200}) return flood event plus 3 feet of freeboard. The CD-4 pipeline would be placed downstream from the road so the road would help protect the pipeline from ice.

GRAVEL SOURCES:
Refer to following drawings (attached)
061 - ASRC Pit Gravel Source
062 - Clover A Gravel Source)

- The ASRC Gravel Source: The ASRC's Gravel Mine Site would be the primary material source for the construction of CD-3 and CD-4. No expansion of the existing permitted area is currently planned. The amendments to the existing reclamation plan would be handled by ASRC. The mine site is located 13 miles southeast of CD-3 and 6 miles southeast of CD-4.

- Clover Gravel Mine (same name as exploration site): This site would be used for the construction of CD-5, CD-6 and CD-7 drill sites and roads. At this time, the site is not fully delineated but the applicant is drilling additional borings this winter 2004 so the delineation can be completed. The applicant is also preparing a mining and reclamation plan. The reclamation plan would include enhanced wildlife habitat where appropriate. The applicant submitted a copy of the Kuparuk Mine Site S rehabilitation plan as a draft rehabilitation plan for the Clover Gravel Mine site.

ADDITIONAL INFORMATION:

Existing Related Facilities (Alpine Development, DA permit POA-1996-874-2): Development in the Colville River Unit began with the construction of Alpine CD-1 and CD-2 drilling sites and associated facilities. Oil production from CD-1 commenced in November 2000 and from CD-2 in November 2001. Oil production from the proposed new satellites would be transported via a new pipeline supported by new VSMs to the Alpine CPF for processing.

Oil Production (Drilling): All produced fluids would be transported to the Alpine CPF for processing. No hydrocarbon processing facilities would be located at any of the new drill sites. The standard pad design uses 20-foot well spacing. A greater number of drilling rigs can operate on 20-foot spacing; there are only a limited number of rigs that can operate on 10-foot spacing. Also, subsidence problems, which have occurred at Alpine, can be minimized with 20-foot spacing between wells. Snow removal constraints and location of wellhead equipment influenced the well-spacing criteria. The increased spacing reduces the impacts to adjacent wells during operations and improves emergency response.

Basic Gravel Pad (Drill Site) Components: The pads will be constructed of a minimum of 5-feet of gravel fill. The applicant has stated that the drill site locations and material storage space requirements were evaluated in order to minimize the gravel footprint. The pads would be oriented northeast to southwest to minimize snow accumulation on the site. Alpine's Storm Water Pollution Prevention Plan would be amended to cover management of pad drainage at the five proposed new satellites.

The gravel pads would have to accommodate rig movement; drilling material storage, valve shelters and well work equipment for drilling up to 32 wells (on 20-foot centers) with wellhead houses. Also, on pad equipment would include emergency shutdown valve skid; manifold piping; test separator; electrical control module; pig launching/receiving facility; crude heater; chemical injection module; production heaters; chemical and liquid fuel storage; spill response equipment container; well testing equipment; four new pipelines to transport water; miscible injectant; lean gas; and produced fluids between CD1 (APF) and each drill site; communication towers; and lighting as needed. An emergency generator would be placed on CD-3 and CD-6 for safety and life support needs in case of a power failure. The communications building at CD-3 would double as an emergency shelter for operators stranded by inclement weather. All facilities would be located on the proposed pads. There are no proposed pile-supported structures or buildings adjacent to the pads/road/bridges.

No processing of the production fluids beyond routine well testing and process fluid heating is proposed at this time. However, the applicant has stated that facilities for gas separation or sales may be needed in the future but is not proposed at this time.

Drilling Wastes: No reserve pits would be constructed at any of the drill sites. Drilling wastes (i.e., spent muds and cuttings) would be managed by a combination of methods: annular disposal into permitted development wells onsite, transport and injection into the approved Class II disposal well at the APF, and reapplication of washed/tested gravels onto pad and/or road surfaces. A temporary storage facility would be constructed to store gravels that have been washed and wait testing prior to their reapplication to the pads and/or road surface. During the initial drilling, and prior to gaining an approved annuli for annular injection, a portion of the solid drilling waste may be stored in the containment awaiting transport to the Alpine Class II disposal well or the Prudhoe Bay Unit waste disposal facility (DS4 Grind and Inject Facility). All well work waste materials would be managed according to the Alpine Waste Management Plan.

Oil Production (Transportation): Oil produced from the new drill pads would be transported via new pipelines supported by new VSMs to the Alpine CPF for processing. The pipelines would consist of a 16- to 24-inch diameter 3-phase (oil, water, and gas) production line, a 6- to 10-inch diameter gas miscible injection line, and an 8- to 14-inch diameter water line. Additionally, CD-3 would have a 2-inch products line. All pipelines would be constructed so that any pipe, vibration dampeners or electrical cable trays would be at a minimum of 7 feet above the tundra measured at the VSMs.

Nigliq Channel Bridge: The United States Coast Guard will be evaluating the proposed Nigliq Bridge in association with the Rivers and Harbors Act of 1899. The Corps of Engineers will review all impacts from associated fill as regulated under Section 404 of the Clean Water Act.

Utility Lines (Power and Communications): The electric power for CD-3, CD-4 and CD-5 would be provided by the existing Alpine power system. No upgrades are required at the Alpine CPF to provide electrical power to the 3 drill sites. The power and communications lines would be placed in a cable tray located on the pipeline VSMs.

Power for CD-6 and CD-7 would be provided by a 1.2 to 2.5 megawatt generator placed at CD-6. The power and communication lines would be placed on cable trays. An emergency generator would be placed on CD-3 and CD-6 for safety and life support needs in case of a power failure.

During construction, temporary power would be provided by portable generator, as necessary.

Construction Methods: *Refer to Drawings 063 through 069 for Proposed Ice Road Locations.* Multiple ice roads would be built to support construction of the gravel roads, pads, the airstrip, and pipelines and power lines to the drill sites. Construction/drilling operations of CD-3 would require construction of an ice road every winter for 5 to 7 years. After completion of drilling at CD-3, an ice road could be built every few years depending on operational needs. The proposed ice road routes run: (1) directly adjacent to the proposed pipeline, and road routes, and; (2) from mine sites to the proposed road route. An ice pad may be placed near each drill site to support construction and provide storage space. Additional ice road routes may be used; routes shown on the drawings are approximate. Ice road spurs to water source lakes are not shown on the enclosed drawings.

Fresh water would be required for construction and maintenance of ice roads and ice pads, and for drilling activities. Lakes near CD-1 and CD-2 that have permanent water rights would be used as water sources, and temporary water use permits would be used for additional sources. Approximately 1 million gallons of water is typically used to construct 1 mile of ice road. Water withdrawals would be made in compliance with the State of Alaska and Bureau of Land Management (BLM) water withdrawal requirements.

Construction/Operation: Winter drilling operations at CD-3 would be supported by the construction of ice roads. It is estimated that a total 5 million gallons would be used during the winter construction season including maintenance. Approximately 50,000 gallons/day of water would be required to support drilling operations. Once drilling is completed, water needs will be less than 10,000 gallons per day for dust suppression and other operational uses.

Camp Facilities: No permanent camp facilities would be required at any of the proposed drill sites because production processing would be performed at the Alpine CPF. Construction crews would be housed at the Alpine Facility or at a temporary camp at the drill site or on an ice pad. An additional 100-man camp could be added to the Alpine base camp for additional bed space during peak construction activities. A temporary camp would likely be used during drilling to support 24-hour drilling operations. During the operation phase at CD-3, the communications module would be designed to accommodate operators who may be stranded due to inclement weather.

Proposed Construction Schedules: Proposed project schedules have been provided by the applicant. The applicant is aware that the project timelines may shift due to the permitting process and/or operational considerations. The following schedule has been provided for the start of work at the different sites:

- Winter 2005 (CD-3 and CD-4): Lay gravel for production pads, drilling (CD-3 only), install VSMs for pipelines, and install module piles. CD-3: Install pipeline bridge foundations (Ulamnigiaq Channel, Tamayayak Channel, and the Sakoonang Channel). CD-4: Install pipelines and power lines.

- Winter 2006 (CD-3): Drilling, install pipelines, install power lines, construct pipeline bridges, install surface facilities, set modules. CD-4: Install surface facilities and set modules.

- Summer 2006 (CD-3 and CD-4): Production startup. CD-4: Drilling.

- Winter 2007 (CD-6): Lay gravel for road and production pad, install VSMs for pipelines, install power lines, install module piles, install bridge piers at the Nigliq Channel, install bridge foundations at the Ublutuock River.

- Winter 2008 (CD-6): Drilling, install pipelines and surface facilities, set modules.

- Summer 2008 (CD-6): Production startup.

- Winter 2009 (CD-5, CD-7 and NPR-A Access Road between CD-6 and CD-7): Construct bridges, lay gravel for road and production pad, install VSMs for pipelines, and install module piles. CD-5 only: Install pipelines and powerlines.

- Winter 2010 (CD-5 and CD-7): Drilling. CD-7 only: Install pipelines and powerlines.

- Summer 2010 (CD-5 and CD-7): Production startup.

- Winter 2011 (CD-5 and CD-7): Drilling.

ALPINE SATELLITE DEVELOPMENT PROGRAM ENVIRONMENTAL IMPACT STATEMENT (ASDP EIS): The BLM and four cooperating agencies - U.S. Army Corps of Engineers, U.S. Environmental Protection Agency, U.S. Coast Guard, and the State of Alaska - have prepared the Alpine Satellite Development Plan Environmental Impact Statement (EIS) to examine CPAI, the applicant's proposed action to develop five satellite oil accumulations in the Northeast National Petroleum Reserve-Alaska (NPR-A) and the CD adjacent to the eastern border of the NPR-A (the Plan Area). The EIS examines the potential impacts of CPAI's proposed Development Plan and evaluates a range of alternatives, consistent with applicable law, by which to accomplish the purpose and need of the proposed action while mitigating adverse impacts. The EIS provides National Environmental Policy Act analysis of CPAI's proposal for five new production well pads and their associated transportation systems.

The Draft EIS was issued in January 2004. Copies of the Draft EIS are available for public review at the following locations: The BLM Alaska State Office, Public Information Center at 222 West 7th Avenue, Anchorage, Alaska 99513-7599; City of Anaktuvuk Pass, Anaktuvuk Pass, Alaska; Loussac Library and Alaska Resources Library and Information Service, Anchorage, Alaska; City of Atqasuk, Atqasuk, Alaska; Tuzzy Public Library, Barrow, Alaska; City of Nuiqsut, Nuiqsut, Alaska; and Noel Wein Library, Fairbanks, Alaska. The entire document can be reviewed at the project web site at http:www.alpine-satellites-eis.com. The Point of Contact for questions regarding the Draft EIS is Mr. Jim Ducker, BLM Alaska State Office at (907) 271-3130; or Mr. Gary Foreman, BLM Northern Field Office at (907) 474-2339. The Point of Contact for the applicant is Ms. Alice Bullington, WNS Permitting Team Lead, CPAI, Post Office Box 100360, Anchorage, Alaska 99510-0360; telephone (907) 263-4206, FAX (907) 265-1515.

MITIGATION and/or MINIMIZATION: A range of alternatives for the proposed development, including the No Action alternative, is currently undergoing analysis as part of the EIS. Prior to submitting the DA permit application, the applicant has conducted and continues to conduct environmental and technical studies in the areas of the proposed projects, and continues to informational meetings with interested parties. Information collected from studies and meetings have been incorporated where practicable as mitigation measures to the proposed project design and operations plan.

WATER QUALITY CERTIFICATION: A permit for the described work will not be issued until a certification or waiver of certification as required under Section 401 of the Clean Water Act (Public Law 95-217), has been received from the Alaska Department of Environmental Conservation.

COASTAL ZONE MANAGEMENT ACT CERTIFICATION: Section 307(c)(3) of the Coastal Zone, Management Act of 1972, as amended by 16 U.S.C. 1456(c)(3), requires the applicant to certify that the described activity affecting land or water uses in the Coastal Zone complies with the Alaska Coastal Management Program. A permit will not be issued until the Office of Management and Budget, Division of Governmental Coordination has concurred with the applicant's certification.

PUBLIC HEARING: Any person may request, in writing, within the comment period specified in this notice, that a public hearing be held to consider this application. Requests for public hearings shall state, with particularity, reasons for holding a public hearing.

CULTURAL RESOURCES: The latest published version of the Alaska Heritage Resources Survey has been consulted for the presence or absence of historic properties, including those listed in or eligible for inclusion in the National Register of Historic Places. In addition, the applicant contracted an archaeological and cultural resources reconnaissance study for the project area. Field studies and archeological/historical/cultural site clearances were conducted during summer 2000, by Dr. Richard Reanier at CD-4 and CD-3 and surrounding locations. "No new or previously undiscovered resources were identified. Consultations were made with locally knowledgeable residents to incorporate Traditional Knowledge into the site investigation reports. The results were communicated to the State Historic Preservation Office (SHPO) office and the North Slope Borough." The first draft of Reanier's survey report is being reviewed. The Corps has not reached any conclusions based on this report regarding impacts the proposed undertaking will have on historic properties. This application and a copy of the cultural resources survey are being coordinated with the SHPO. Any comments the SHPO may have concerning presently unknown archeological or historic data that may be lost or destroyed by work under the requested permit will be considered in our final assessment of the described work.

ENDANGERED SPECIES: The project area is within the known or historic range of the Stellers's eider (*Polysticta stelleri*), and the spectacled eider (*Somateria fischeri*). This application is being coordinated with the U.S. Fish and Wildlife Service and the National Marine Fisheries Service regarding the described activity and any effects to threatened or endangered species, or their critical habitat designated as endangered or threatened, under the Endangered Species Act of 1973 (87 Stat. 844). The FWS is writing a Biological Opinion (BO) that will address concerns regarding Endangered Species, critical habitat and mitigation measures. The BO will be included in the Final EIS. Any comments they may have concerning endangered or threatened wildlife or plants or their critical habitat will be considered in our final assessment of the described work.

ESSENTIAL FISH HABITAT: The proposed work is being evaluated for possible effects to Essential Fish Habitat (EFH) pursuant to the Magnuson Stevens Fishery Conservation and Management Act of 1996 (MSFCMA), 16 U.S.C. et seq and associated federal regulations found at 50 CFR 600 Subpart K. The Alaska District includes areas of EFH as Fishery Management Plans. We have reviewed the January 20, 1999, North Pacific Fishery Management Council's Environmental Assessment to locate EFH area as identified by the National Marine Fisheries Service. We have determined that the described activity within the proposed area may negatively impact EFH, including anadromous fish and federally managed fishery resources.

FLOOD PLAIN MANAGEMENT: Evaluation of the described activity will include conformance with appropriate State of local flood plain standards, consideration of alternative sites and methods of accomplishment; and weighing of the positive, concentrated and dispersed, and short and long-term impacts on the flood plain.

SPECIAL AREA DESIGNATION: The Colville River delta area is designated as an "Area Meriting Special Attention" within the North Slope Borough's Coastal Management Plan.

EVALUATION: The decision whether to issue a permit will be based on an evaluation of the probable impacts including cumulative impacts of the proposed activity and its intended use on the public interest. Evaluation of the probable impacts which the proposed activity may have on the public interest requires a careful weighing of all those factors which become relevant in each particular case. The benefits which reasonably may be expected to accrue from the proposal must be balanced against its reasonably foreseeable detriments. The decision whether to authorize a proposal, and if so, the conditions under which it will be allowed to occur, are therefore determined by the outcome of the general balancing process. That decision should reflect the national concern for both protection and utilization of important resources. All factors which may be relevant to the proposal must be considered including the cumulative effects thereof. Among those are conservation, economics, aesthetics, general environmental concerns, wetlands, cultural values, fish and wildlife values, flood hazards, floodplain values, land use, navigation, shore erosion and accretion, recreation, water supply and conservation, water quality, energy needs, safety, food and fiber production, mineral needs, considerations of property ownership, and, in general, the needs and welfare of the people. For activities involving 404 discharges, a permit will be denied if the discharge that would be authorized by such permit would not comply with the Environmental Protection Agency's 404(b)(1) guidelines. Subject to the preceding sentence and any other applicable guidelines or criteria (see Sections 320.2 and 320.3), a permit will be granted unless the District Engineer determines that it would be contrary to the public interest.

The Corps of Engineers is soliciting comments from the public; Federal, State, and local agencies and officials; Indian Tribes; and other interested parties in order to consider and evaluate the impacts of this proposed activity. Any comments received will be considered by the Corps of Engineers to determine whether to issue, modify, condition or deny a permit for this proposal. To make this decision, comments are used to assess impacts on endangered species, historic properties, water quality, general environmental effects, and the other public interest factors listed above. Comments are used in the preparation of an Environmental Assessment and/or an Environmental Impact Statement pursuant to the National Environmental Policy Act. Comments are also used to determine the need for a public hearing and to determine the overall public interest of the proposed activity.

Comments on the described work, with the reference number, should reach this office no later than the expiration date of this Public Notice to become part of the record and be considered in the decision. Please contact Ms. Joy B. Earp at (907) 753-2716, or toll free from within Alaska at (800) 478-2712, if further information is desired concerning this notice.

AUTHORITY: This permit will be issued or denied under the following authorities:

(X) Perform work in or affecting navigable waters of the United States - Section 10 Rivers and Harbors Act 1899 (33 U.S.C. 403).

(X) Discharge dredged or fill material into waters of the United States - Section 404 Clean Water Act (33 U.S.C. 1344). Therefore, our public interest review will consider the guidelines set forth under Section 404(b) of the Clean Water Act (40 CFR 230).

Project Drawings, Notice of Application for Certification of Consistency with the Alaska Coastal Management Program, and Notice of Application for State Water Quality Certification are attached to this Public Notice.

District Engineer
U.S. Army, Corps of Engineers

Attachments

REV	DATE	BY	CK	APP	DESCRIPTION	REV	DATE	BY	CK	APP	DESCRIPTION
0	01/04	RLC	JWP	--	ISSUE FOR PERMIT						

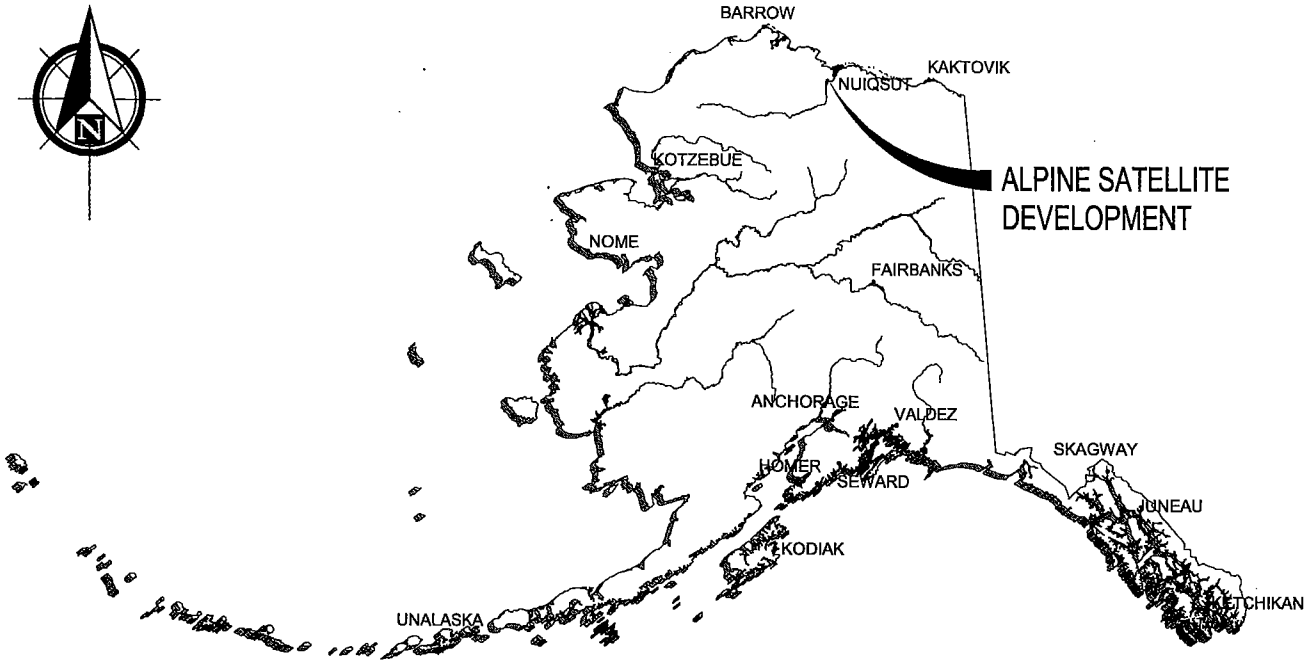

ALASKA VICNITY MAP

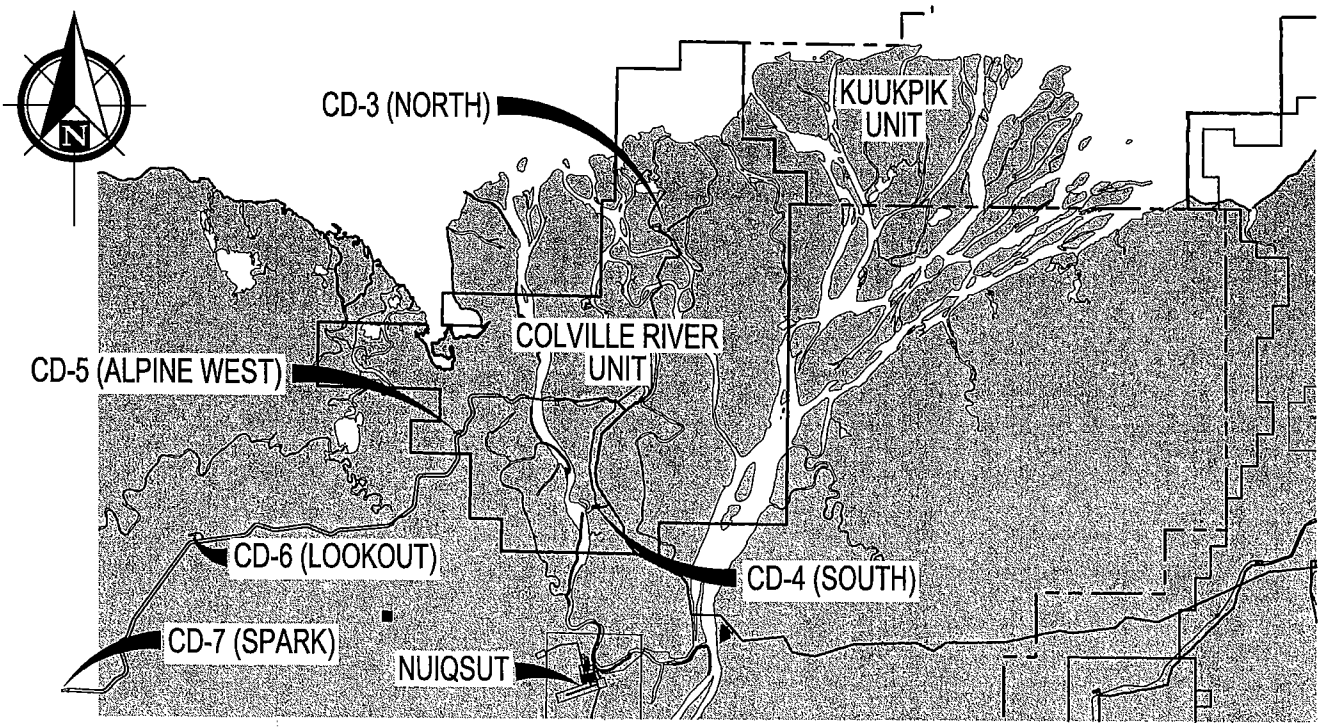

ALPINE SATELLITE DEVELOPMENT VICINITY MAP

03-19-04

SCALE IN MILES
3 0 3 6 9

PND Incorporated CONSULTING ENGINEERS

ConocoPhillips Alaska, Inc.

AREA: 00 MODULE: XXXX UNIT: R1

ALPINE SATELLITE DEVELOPMENT PROGRAM
VICINITY MAP

CADD FILE NO.	DRAWING NO: CEA-R1XX-XXXX	SHEET: 001 OF 71	REV: 0

REV	DATE	BY	CK	APP	DESCRIPTION	REV	DATE	BY	CK	APP	DESCRIPTION
0	01/04	RLC	JWP	–	ISSUE FOR PERMIT						

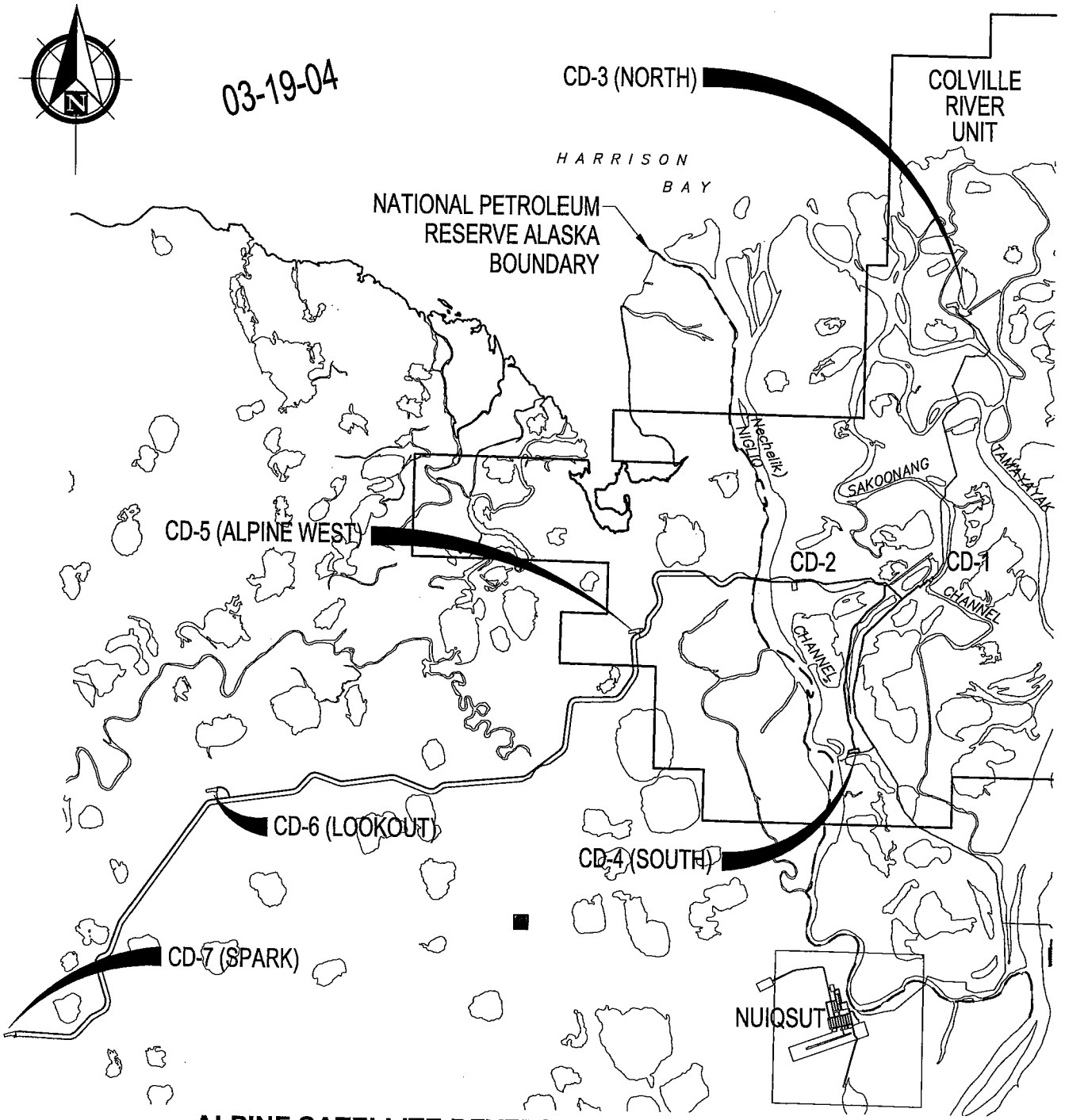

ALPINE SATELLITE DEVELOPMENT LOCATION MAP

- - - - - NATIONAL PETROLEUM RESERVE–ALASKA BOUNDARY
——— COLVILLE RIVER OIL & GAS UNIT BOUNDARY
——— NUIQSUT MINICIPAL BOUNDARY

SCALE IN MILES
1.5 0 1.5 3 4.5

THIS MAP PROJECTION IS BASE UPON ALASKA STATE PLANE, NAD 83. THIS MAP IS BASED ON DATA PROVIDED BY THE U.S. GEOLOGICAL SURVEY, THE ALASKA DEPARTMENT OF NATURAL RESOURCES, AND CONOCO PHILLIPS ALASKA, INC.

PND Incorporated CONSULTING ENGINEERS

ConocoPhillips Alaska, Inc.

AREA: 00 MODULE: XXXX UNIT: R1

ALPINE SATELLITE DEVELOPMENT PROGRAM LOCATION MAP

CADD FILE NO.	DRAWING NO: CEA–R1XX–XXXX	SHEET: 002 OF 71	REV: 0

PND CAD File: J:\2001\01117.01 NPRA-FIS\Permitting\Drawings\- Dwg Package A\02 - Location Map.dwg - Mar 19 2004 - REV0

REV	DATE	BY	CK	APP	DESCRIPTION	REV	DATE	BY	CK	APP	DESCRIPTION
0	01/04	RLC	JWP	–	ISSUE FOR PERMIT						

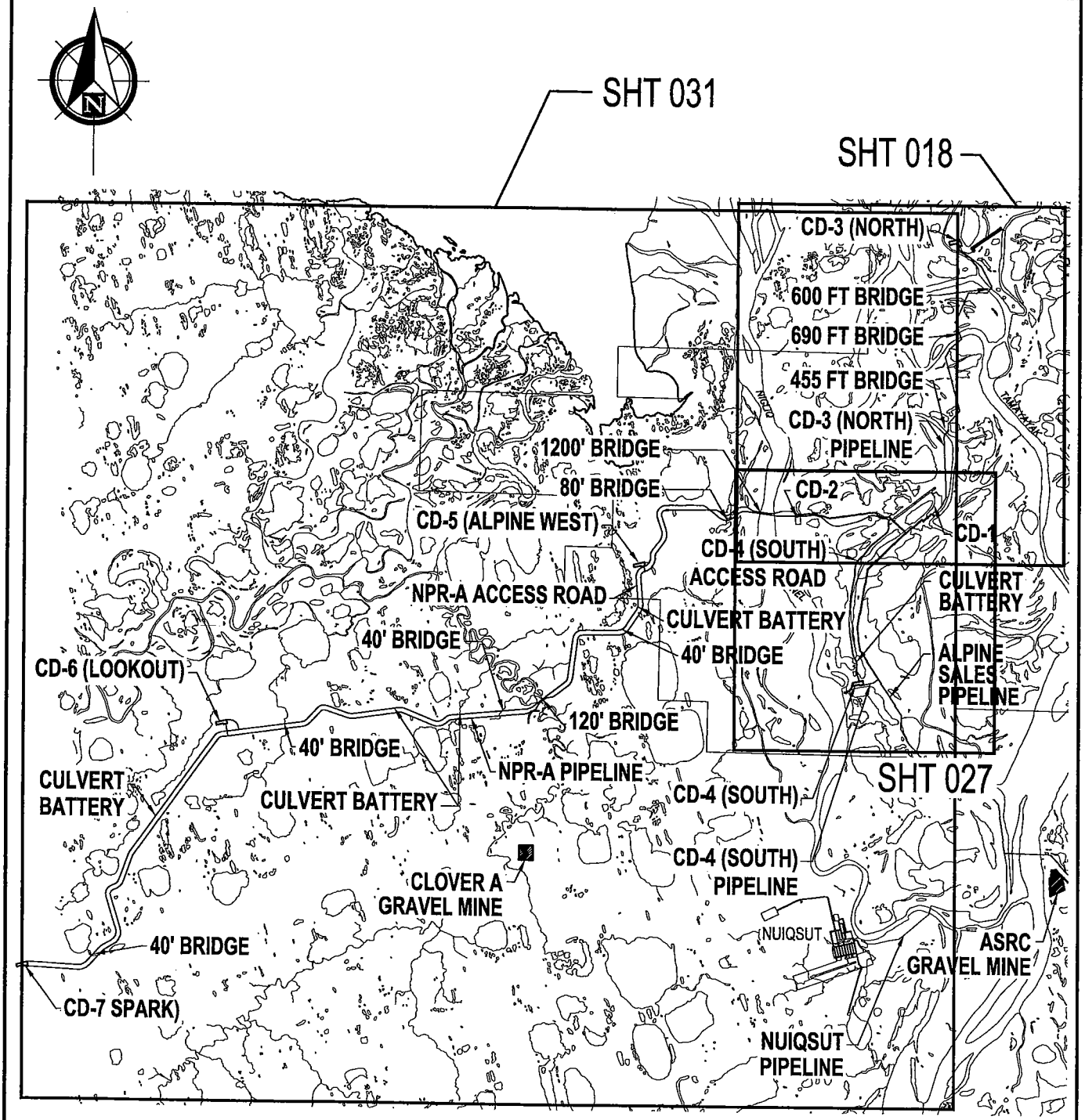

SCALE IN MILES
1.5 0 1.5 3 4.5

03-19-04

P | N | D Incorporated CONSULTING ENGINEERS

ConocoPhillips Alaska, Inc.

AREA: 00 MODULE: XXXX UNIT: R1

ALPINE SATELLITE DEVELOPMENT PROGRAM
OVERVIEW

CADD FILE NO. | DRAWING NO: CEA–R1XX–XXXX | SHEET: 003 OF 71 | REV: 0

PND CAD File: J:\2001\01117.01 NPRA-EIS\Permitting\Drawings\- Dwg Package A\03 - NPRA Access Road Overview.dwg Mar 19 2004 REV0

REV	DATE	BY	CK	APP	DESCRIPTION	REV	DATE	BY	CK	APP	DESCRIPTION
0	01/04	RLC	JWP	–	ISSUE FOR PERMIT						

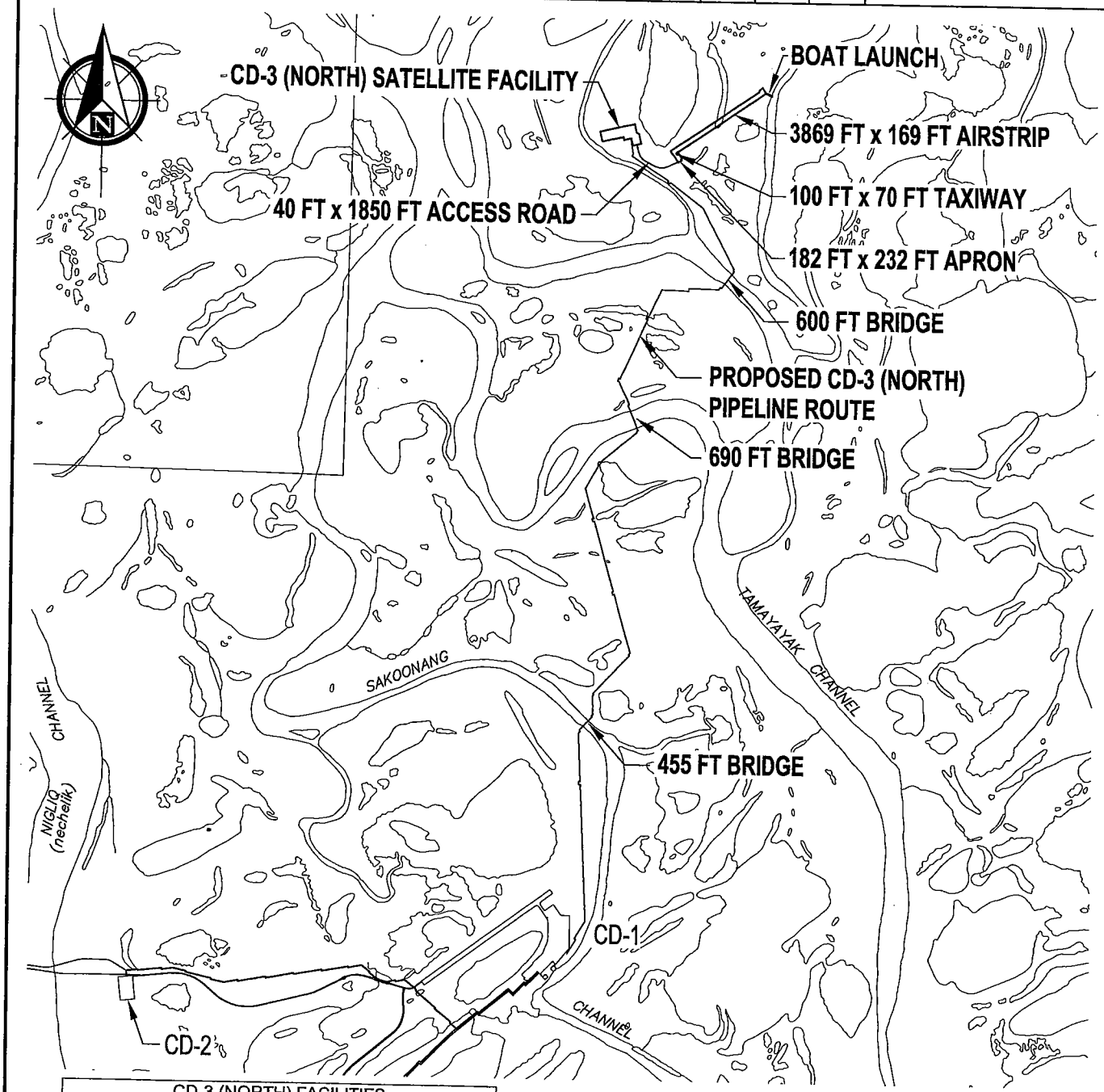

CD-3 (NORTH) FACILITIES	
PIPELINE LENGTH	34,754 FT
ACCESS ROAD LENGTH	0.4 MI
AREA OF ACCESS TUNDRA COVER	1.7 ACRES
AREA OF PAD TUNDRA COVER	12.6 ACRES
AREA OF AIRSTRIP TUNDRA COVER	15.2 ACRES
AREA OF TAXIWAY/APRON TUNDRA COVER	1.1 ACRES
AREA OF BOAT LAUNCH TUNDRA COVER	0.3 ACRES
QUANTITY OF ACCESS GRAVEL	12,000 CY
QUANTITY OF PAD GRAVEL	110,000 CY
QUANTITY OF AIRSTRIP GRAVEL	120,000 CY
QUANTITY OF TAXIWAY/APRON GRAVEL	10,000 CY
QUANTITY OF BOAT LAUNCH GRAVEL	2,000 CY

03-19-04

SCALE IN MILES

.5 0 .5 1 1.5

THIS MAP PROJECTION IS BASE UPON ALASKA STATE PLANE, NAD 83. THIS MAP IS BASED ON DATA PROVIDED BY THE U.S. GEOLOGICAL SURVEY, THE ALASKA DEPARTMENT OF NATURAL RESOURCES, AND CONOCO PHILLIPS ALASKA, INC.

P | N | D Incorporated CONSULTING ENGINEERS

ConocoPhillips Alaska, Inc.

AREA: 00 MODULE: XXXX UNIT: R1

ALPINE SATELLITE DEVELOPMENT PROGRAM
CD-3 (NORTH) SATELLITE FACILITY
OVERVIEW

CADD FILE NO. | DRAWING NO: CEA-R1XX-XXXX | SHEET: 004 OF 71 | REV: 0

PND CAD File: J:\2001\01117.01 NPRA-EIS\Permitting\Drawings\- Dwg Package A\04 - CD-3 Overview.dwg, Mar 19 2004 REV0

REV	DATE	BY	CK	APP	DESCRIPTION	REV	DATE	BY	CK	APP	DESCRIPTION
0	01/04	RLC	JWP	–	ISSUE FOR PERMIT						

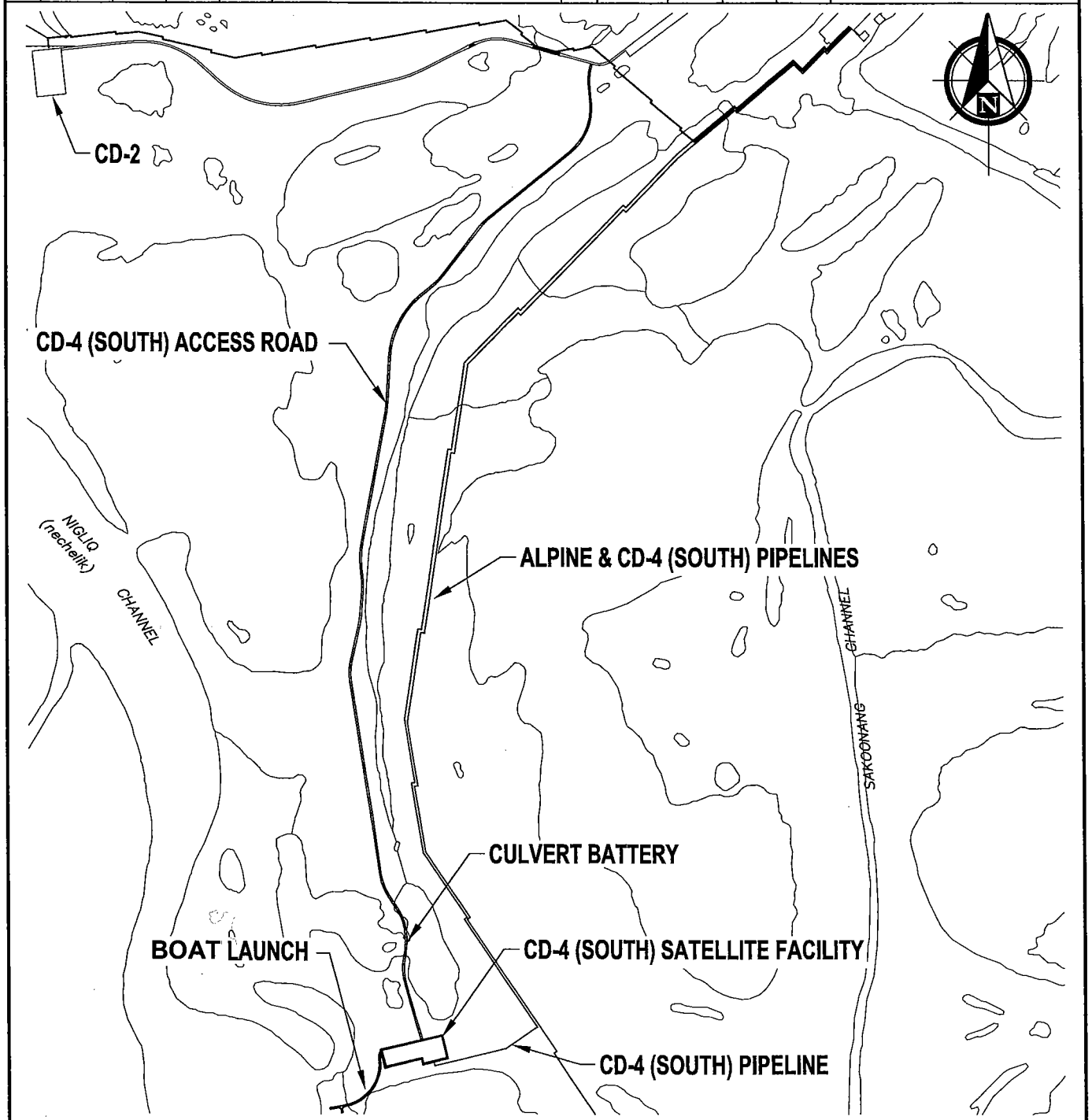

CD-4 (SOUTH) FACILITIES	
PIPELINE LENGTH	22,000 FEET
ROAD LENGTH	3.6 MI
AREA OF ROAD TUNDRA COVER	25.4 ACRES
AREA OF PAD TUNDRA COVER	9.3 ACRES
AREA OF BOAT LAUNCH TUNDRA COVER	1.7 ACRES
QUANTITY OF ROAD GRAVEL	210,000 CY
QUANTITY OF PAD GRAVEL	112,000 CY
QUANTITY OF BOAT LAUNCH GRAVEL	16,000 CY

03-19-04

SCALE IN MILES
.25 0 .25 .5 .75

THIS MAP PROJECTION IS BASE UPON ALASKA STATE PLANE, NAD 83. THIS MAP IS BASED ON DATA PROVIDED BY THE U.S. GEOLOGICAL SURVEY, THE ALASKA DEPARTMENT OF NATURAL RESOURCES, AND CONOCO PHILLIPS ALASKA, INC.

P N D Incorporated CONSULTING ENGINEERS

ConocoPhillips Alaska, Inc.

AREA: 00 MODULE: XXXX UNIT: R1

ALPINE SATELLITE DEVELOPMENT PROGRAM
CD-4 (SOUTH) SATELLITE FACILITY
OVERVIEW

CADD FILE NO.	DRAWING NO: CEA-R1XX-XXXX	SHEET: 005 OF 71	REV: 0

REV	DATE	BY	CK	APP	DESCRIPTION	REV	DATE	BY	CK	APP	DESCRIPTION
0	01/04	RLC	JWP	–	ISSUE FOR PERMIT						

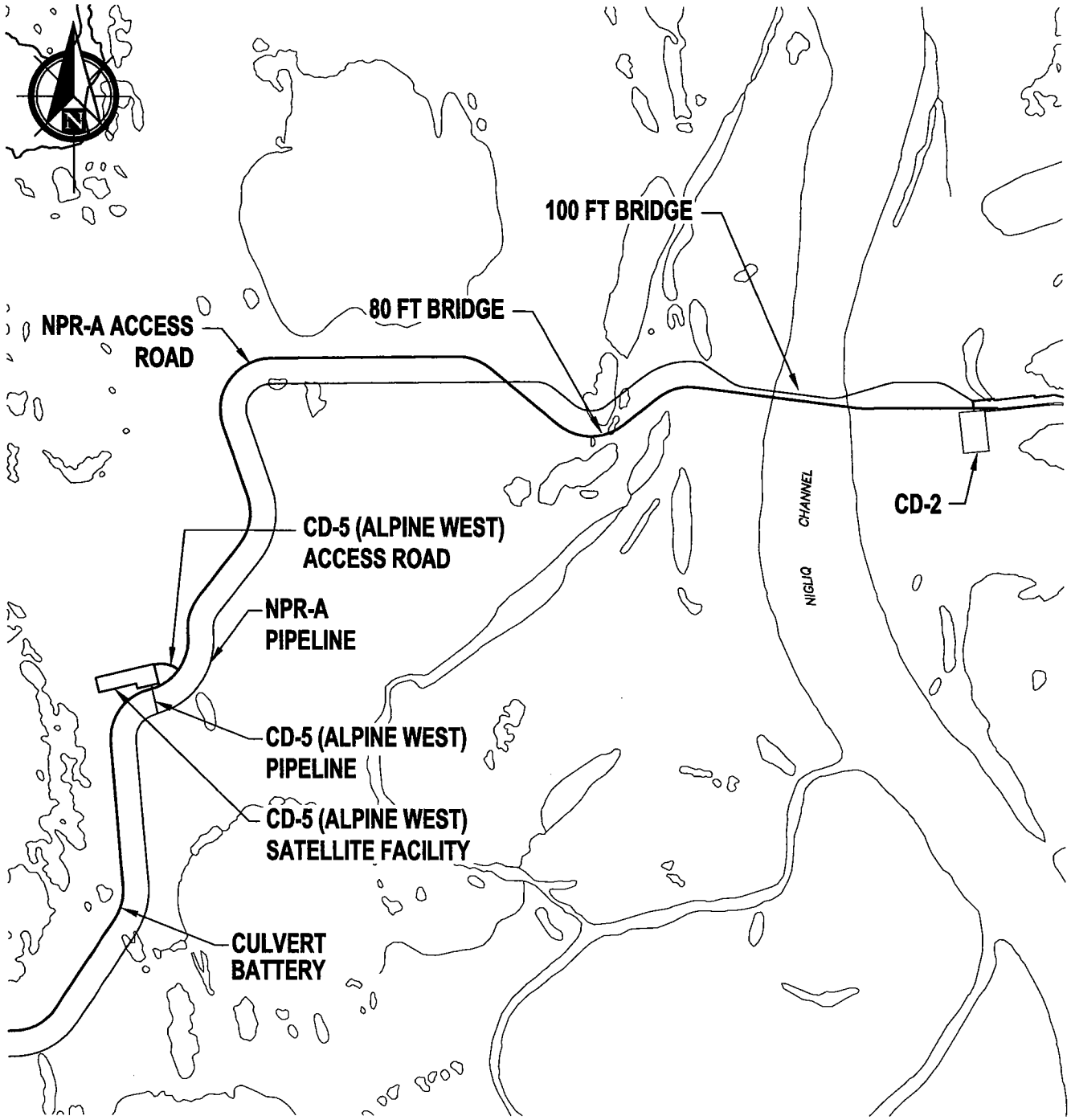

CD-5 (ALPINE WEST) FACILITIES	
PIPELINE LENGTH	600 FEET
ACCESS ROAD LENGTH	0.1 MILE
AREA OF ROAD TUNDRA COVER	0.5 ACRES
AREA OF PAD TUNDRA COVER	9.1 ACRES
QUANTITY OF ROAD GRAVEL	5000 CY
QUANTITY OF PAD GRAVEL	78,000 CY

03-19-04

SCALE IN MILES

.25 0 .25 .5 .75

THIS MAP PROJECTION IS BASE UPON ALASKA STATE PLANE, NAD 83. THIS MAP IS BASED ON DATA PROVIDED BY THE U.S. GEOLOGICAL SURVEY, THE ALASKA DEPARTMENT OF NATURAL RESOURCES, AND CONOCO PHILLIPS ALASKA, INC.

P N D Incorporated CONSULTING ENGINEERS

ConocoPhillips Alaska, Inc.

AREA: 00 MODULE: XXXX UNIT: R1

ALPINE SATELLITE DEVELOPMENT PROGRAM
CD-5 (ALPINE WEST) SATELLITE FACILITY
OVERVIEW

CADD FILE NO.	DRAWING NO: CEA-R1XX-XXXX	SHEET: 006 OF 71	REV: 0

PND CAD File: J:\2001\01117.01 NPRA-EIS\Permitting\Drawings\- Dwg Package A\06 - CD-5 Overview.dwg, Mar 19 2004, REV0

REV	DATE	BY	CK	APP	DESCRIPTION	REV	DATE	BY	CK	APP	DESCRIPTION
0	01/04	RLC	JWP	–	ISSUE FOR PERMIT						

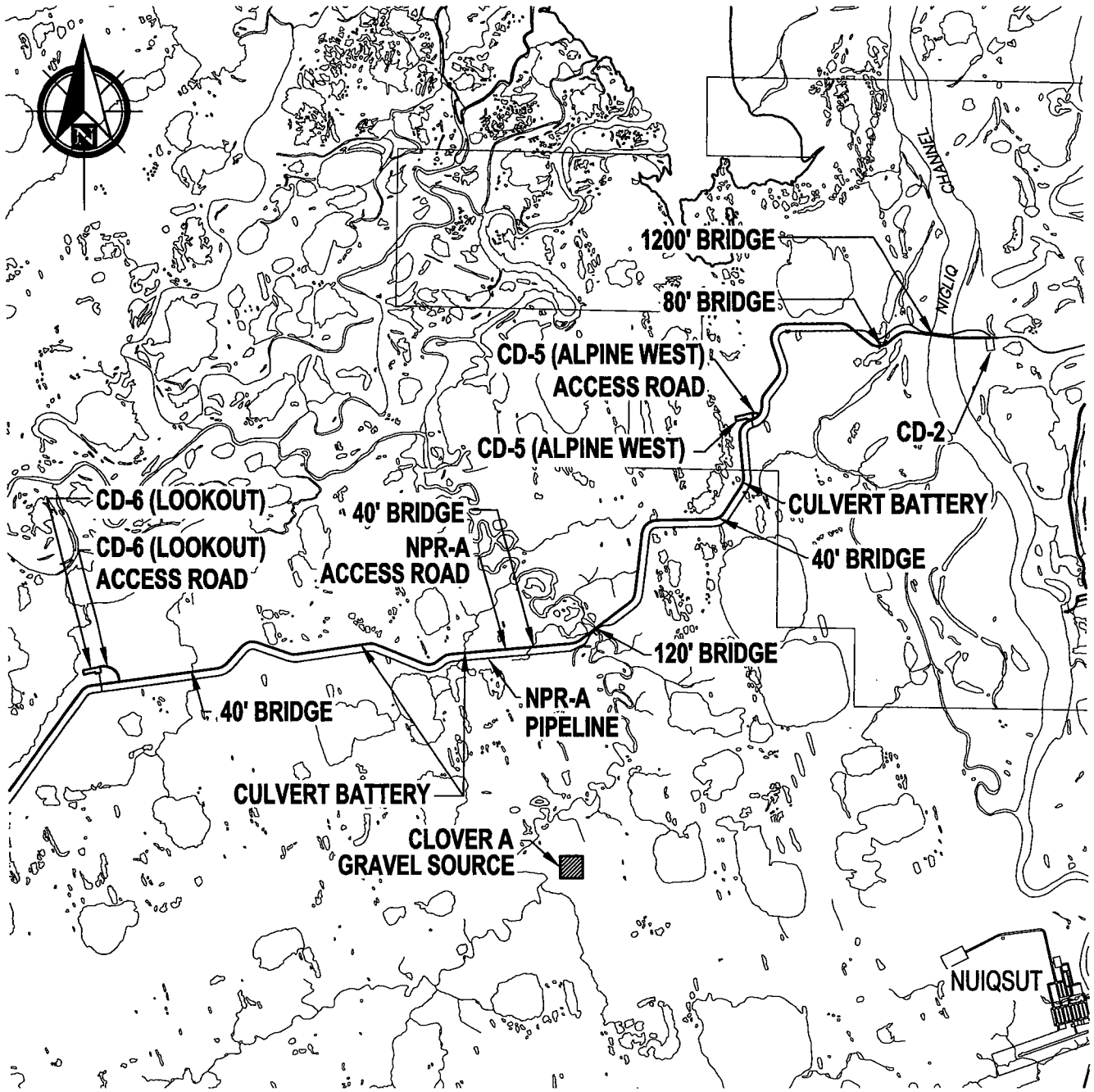

CD-6 (LOOKOUT) FACILITIES	
PIPELINE LENGTH	80,000 FT
MAIN ROAD LENGTH	14.7 MI
ACCESS ROAD LENGTH	0.4 MI
AREA OF MAIN ROAD TUNDRA COVER	100 ACRES
AREA OF ACCESS ROAD TUNDRA COVER	2.5 ACRES
AREA OF PAD TUNDRA COVER	9.1 ACRES
QUANTITY OF MAIN ROAD GRAVEL	761,000 CY
QUANTITY OF ACCESS ROAD GRAVEL	19,000 CY
QUANTITY OF PAD GRAVEL	78,000 CY

03-19-04

SCALE IN MILES

1 0 1 2 3

THIS MAP PROJECTION IS BASE UPON ALASKA STATE PLANE, NAD 83. THIS MAP IS BASED ON DATA PROVIDED BY THE U.S. GEOLOGICAL SURVEY, THE ALASKA DEPARTMENT OF NATURAL RESOURCES, AND CONOCO PHILLIPS ALASKA, INC.

P | N | D Incorporated CONSULTING ENGINEERS

ConocoPhillips Alaska, Inc.

AREA: 00 MODULE: XXXX UNIT: R1

ALPINE SATELLITE DEVELOPMENT PROGRAM
CD-6 (LOOKOUT) SATELLITE FACILITY
OVERVIEW

CADD FILE NO.	DRAWING NO: CEA-R1XX-XXXX	SHEET: 007 OF 71	REV: 0

PND CAD File: J:\2001\01117.01 NPRA-EIS\Permitting\Drawings\- Dwg Package A\07 - CD-6 Overview.dwg, Mar 19 2004, REV0

REV	DATE	BY	CK	APP	DESCRIPTION	REV	DATE	BY	CK	APP	DESCRIPTION
0	01/04	RLC	JWP	–	ISSUE FOR PERMIT						

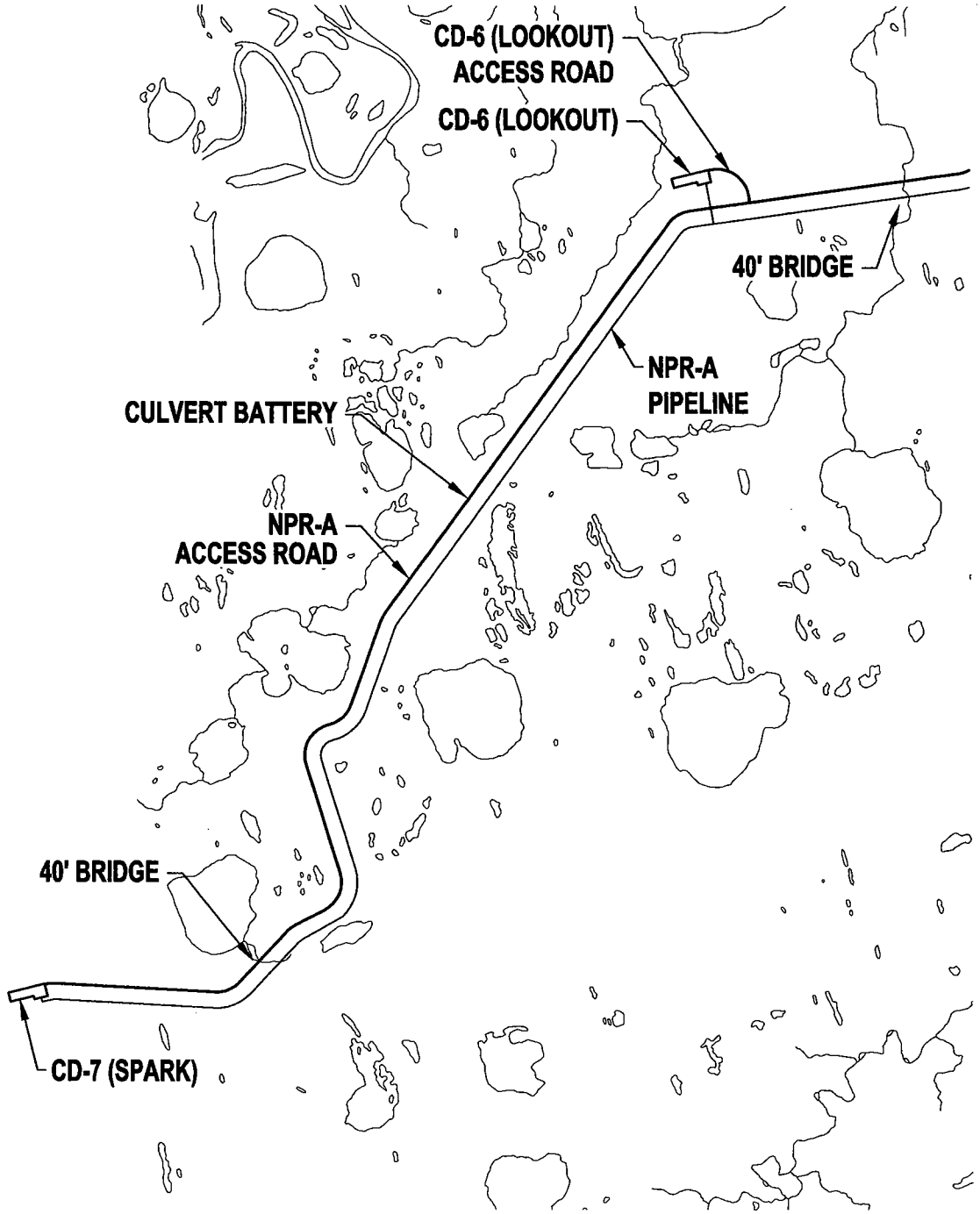

CD-7 (SPARK) FACILITIES	
PIPELINE LENGTH	39,000 FT
MAIN ROAD LENGTH	7.3 MI
AREA OF MAIN ROAD TUNDRA COVER	49.4 ACRES
AREA OF PAD TUNDRA COVER	9.1 ACRES
QUANTITY OF MAIN ROAD GRAVEL	376,000 CY
QUANTITY OF PAD GRAVEL	78.000 CY

03-19-04

SCALE IN MILES

.5 0 .5 1 1.5

THIS MAP PROJECTION IS BASE UPON ALASKA STATE PLANE, NAD 83. THIS MAP IS BASED ON DATA PROVIDED BY THE U.S. GEOLOGICAL SURVEY, THE ALASKA DEPARTMENT OF NATURAL RESOURCES, AND CONOCO PHILLIPS ALASKA, INC.

P N D Incorporated CONSULTING ENGINEERS

ConocoPhillips Alaska, Inc.

AREA: 00 MODULE: XXXX UNIT: R1

ALPINE SATELLITE DEVELOPMENT PROGRAM
CD-7 (SPARK) SATELLITE FACILITY
OVERVIEW

CADD FILE NO.	DRAWING NO: CEA-R1XX-XXXX	SHEET: 008 OF 71	REV: 0

PND CAD File: J:\2001\01117.01 NPRA-EIS\Permitting\Drawings\- Dwg Package A\08 - CD-7 Overview.dwg, Mar 19 2004, REV0

Sheet
009 of 071
blank sheet

REV	DATE	BY	CK	APP	DESCRIPTION	REV	DATE	BY	CK	APP	DESCRIPTION
0	01/04	RLC	JWP	–	ISSUE FOR PERMIT						

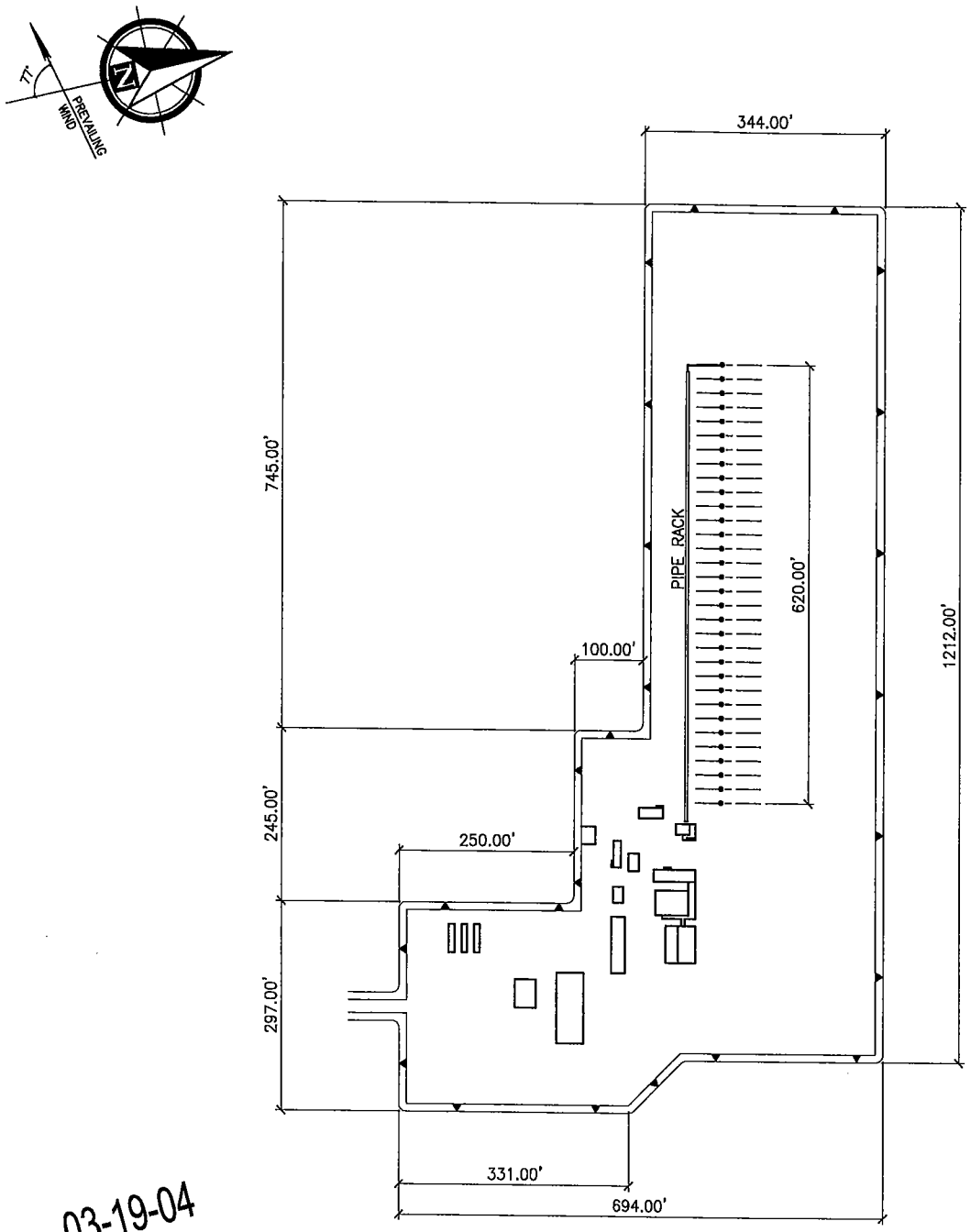

03-19-04

CD-3 (NORTH) PAD QUANTITIES	
AREA OF TUNDRA COVER	12.6 ACRES
QUANTITY OF GRAVEL	110,000 CY

ASSUME AVERAGE FILL DEPTH OF 5.5'

NOTE:
MINIMUM GRAVEL DEPTH
5.0' WITH 2:1 FILL SLOPES

SCALE IN FEET
125 0 125 250 375

THIS MAP PROJECTION IS BASE UPON ALASKA STATE PLANE, NAD 83. THIS MAP IS BASED ON DATA PROVIDED BY THE U.S. GEOLOGICAL SURVEY, THE ALASKA DEPARTMENT OF NATURAL RESOURCES, AND CONOCO PHILLIPS ALASKA, INC.

PND Incorporated CONSULTING ENGINEERS

ConocoPhillips Alaska, Inc.

AREA: 00 MODULE: XXXX UNIT: R1

ALPINE SATELLITE DEVELOPMENT PROGRAM
CD-3 (NORTH) PAD FOOTPRINT

CADD FILE NO.	DRAWING NO: CEA-R1XX-XXXX	SHEET: 010 OF 71	REV: 0

REV	DATE	BY	CK	APP	DESCRIPTION	REV	DATE	BY	CK	APP	DESCRIPTION
0	01/04	RLC	JWP	–	ISSUE FOR PERMIT						

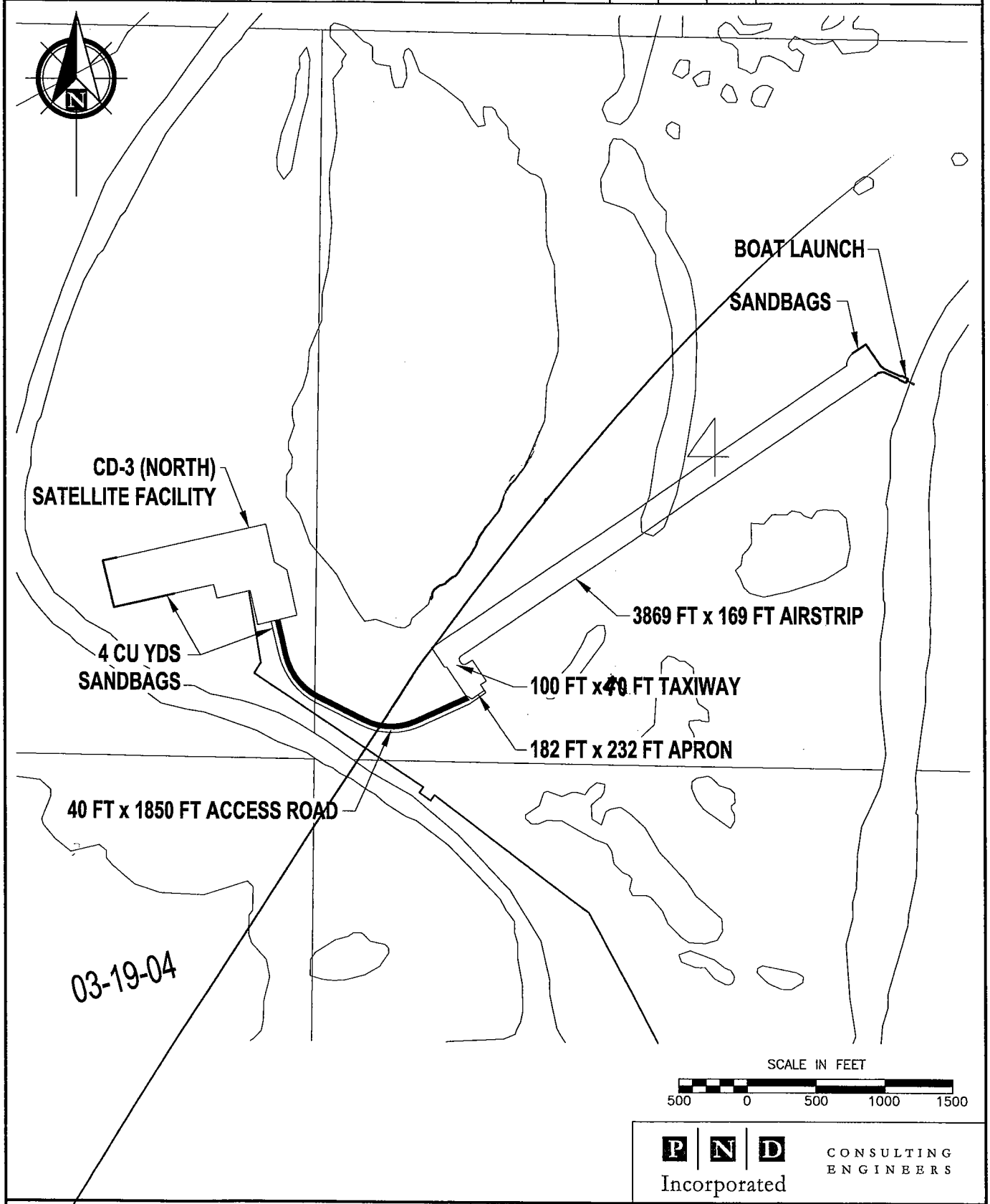

P | N | D Incorporated CONSULTING ENGINEERS

ConocoPhillips Alaska, Inc.

AREA: 00 MODULE: XXXX UNIT: R1

ALPINE SATELLITE DEVELOPMENT PROGRAM
CD-3 (NORTH) PAD, ACCESS ROAD
AND AIRSTRIP LAYOUT

CADD FILE NO.	DRAWING NO:	SHEET:	REV:
	CEA-R1XX-XXXX	011 OF 71	0

REV	DATE	BY	CK	APP	DESCRIPTION	REV	DATE	BY	CK	APP	DESCRIPTION
0	01/04	RLC	JWP	–	ISSUE FOR PERMIT						

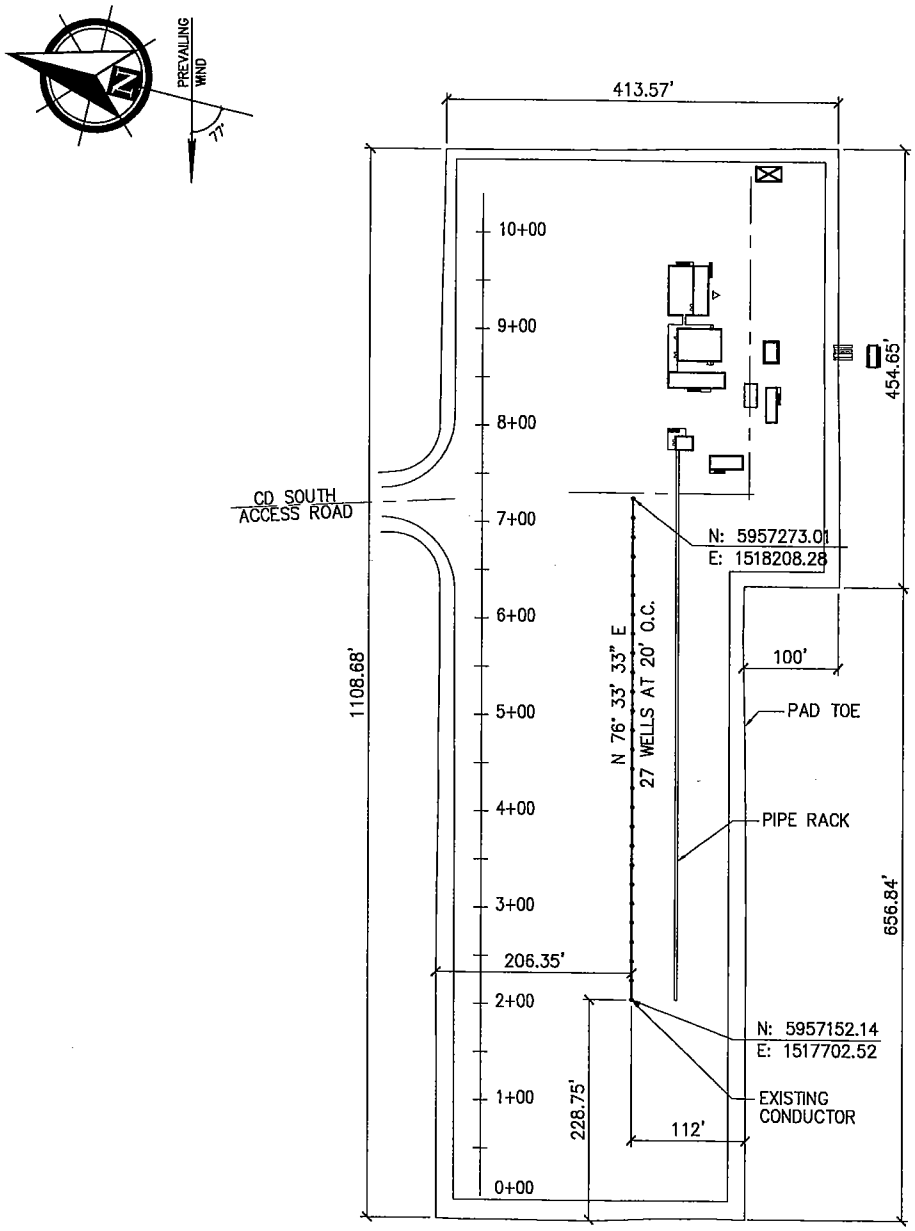

03-19-04

CD-4 (SOUTH) PAD QUANTITIES	
AREA OF TUNDRA COVER	9.3 ACRES
QUANTITY OF GRAVEL	112,000 CY

AVERAGE DEPTH OF 7.5', FROM EXISTING TOPOGRAPHIC INFORMATION

NOTE:
MINIMUM GRAVEL DEPTH
5.0' WITH 2:1 FILL SLOPES

SCALE IN FEET
100 0 100 200 300

THIS MAP PROJECTION IS BASE UPON ALASKA STATE PLANE, NAD 83. THIS MAP IS BASED ON DATA PROVIDED BY THE U.S. GEOLOGICAL SURVEY, THE ALASKA DEPARTMENT OF NATURAL RESOURCES, AND CONOCO PHILLIPS ALASKA, INC.

P N D Incorporated CONSULTING ENGINEERS

ConocoPhillips Alaska, Inc.

AREA: 00 MODULE: XXXX UNIT: R1

ALPINE SATELLITE DEVELOPMENT PROGRAM
CD-4 (SOUTH) PAD FOOTPRINT

CADD FILE NO.	DRAWING NO: CEA-R1XX-XXXX	SHEET: 012 OF 71	REV: 0

PND CAD File: J:\2001\01117.01 NPRA-EIS\Permitting\Drawings\ Dwg Package A\12 - CD-4 Pad Footprint.dwg - Mar 18 2004 - DFLYE

REV	DATE	BY	CK	APP	DESCRIPTION	REV	DATE	BY	CK	APP	DESCRIPTION
0	01/04	RLC	JWP	–	ISSUE FOR PERMIT						

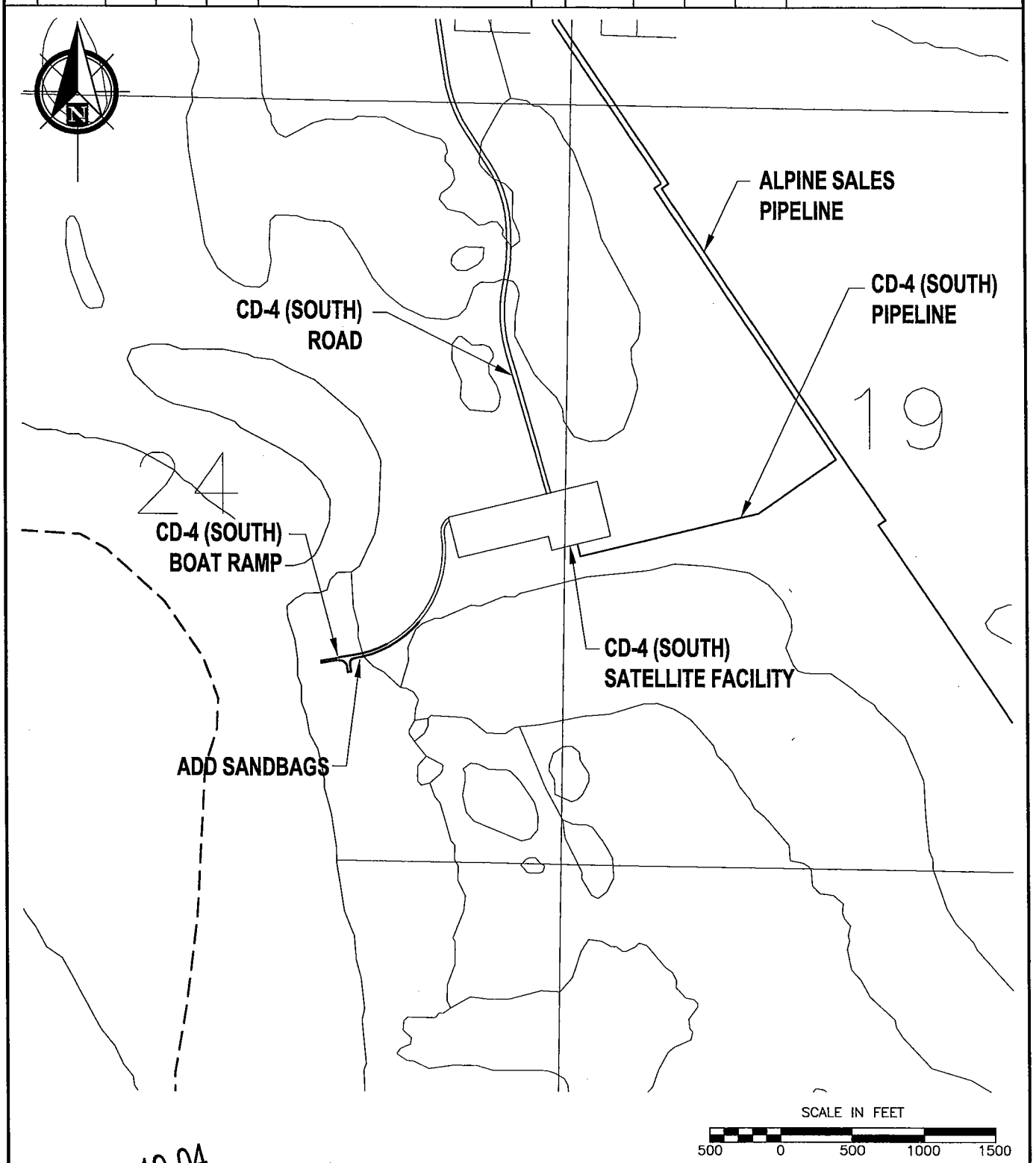

03-19-04

P N D Incorporated CONSULTING ENGINEERS

ConocoPhillips Alaska, Inc.

AREA: 00 MODULE: XXXX UNIT: R1

ALPINE SATELLITE DEVELOPMENT PROGRAM
CD-4 (SOUTH) PAD, ACCESS ROAD
LAYOUT

CADD FILE NO.	DRAWING NO:	SHEET:	REV:
	CEA-R1XX-XXXX	013 OF 71	0

REV	DATE	BY	CK	APP	DESCRIPTION	REV	DATE	BY	CK	APP	DESCRIPTION
0	01/04	RLC	JWP	–	ISSUE FOR PERMIT						

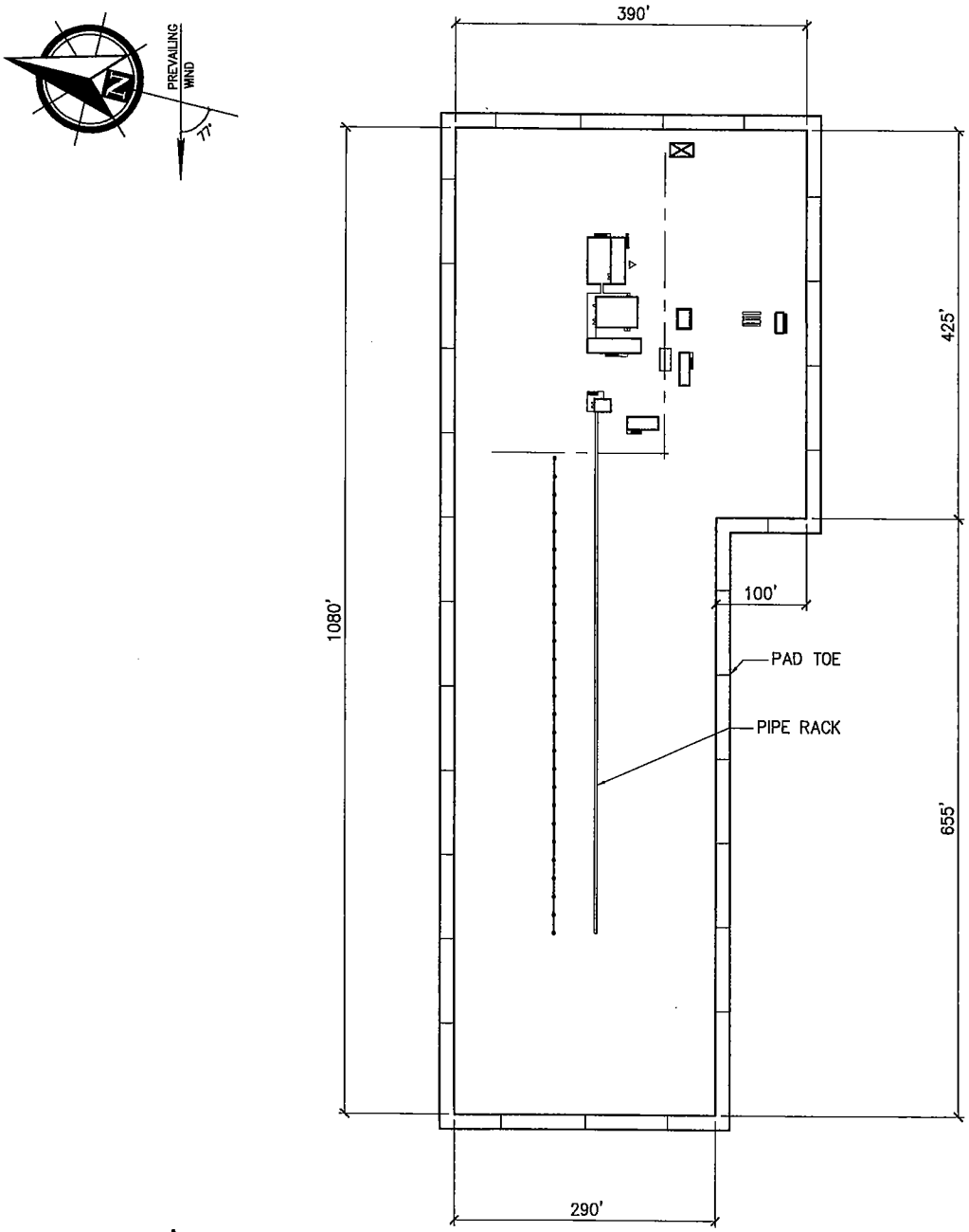

03-19-04

CD-5, CD-6 & CD-7 PAD QUANTITIES	
AREA OF TUNDRA COVER	9.1 ACRES
QUANTITY OF GRAVEL	78,000 CY

ASSUME AVERAGE FILL DEPTH OF 5.5'

NOTE:
MINIMUM GRAVEL DEPTH
5.0' WITH 2:1 FILL SLOPES

SCALE IN FEET
100 0 100 200 300

THIS MAP PROJECTION IS BASE UPON ALASKA STATE PLANE, NAD 83. THIS MAP IS BASED ON DATA PROVIDED BY THE U.S. GEOLOGICAL SURVEY, THE ALASKA DEPARTMENT OF NATURAL RESOURCES, AND CONOCO PHILLIPS ALASKA, INC.

P | N | D Incorporated CONSULTING ENGINEERS

ConocoPhillips Alaska, Inc.

AREA: 00 MODULE: XXXX UNIT: R1

ALPINE SATELLITE DEVELOPMENT PROGRAM
TYPICAL PAD FOR CD-5 (ALPINE WEST),
CD-6 (LOOKOUT) AND CD-7 (SPARK)

CADD FILE NO.	DRAWING NO: CEA-R1XX-XXXX	SHEET: 014 OF 71	REV: 0

REV	DATE	BY	CK	APP	DESCRIPTION	REV	DATE	BY	CK	APP	DESCRIPTION
0	01/04	RLC	JWP	–	ISSUE FOR PERMIT						

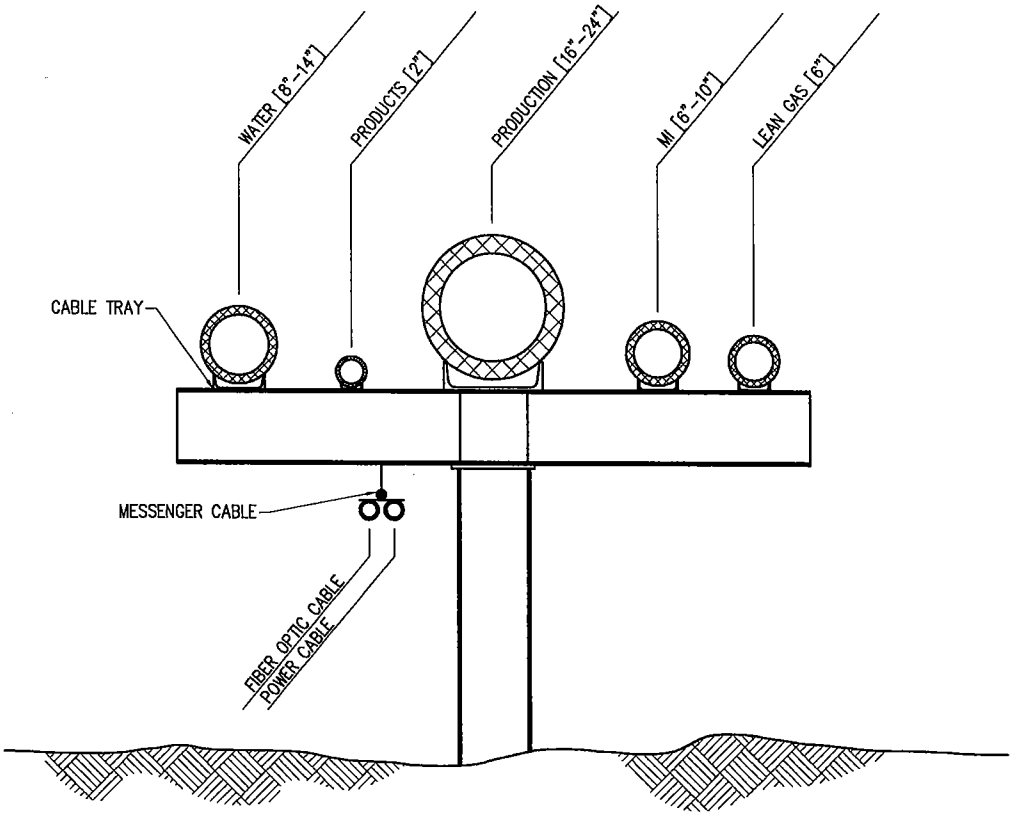

CD-3 TYPICAL SECTION

03-19-04

PURPOSE:
INSTALL VSM'S, ASSOCIATED PIPELINES AND UTILITIES.

DATUM:
BRITISH PETROLEUM MEAN SEA LEVEL

ADJACENT PROPERTY OWNERS:
STATE OF ALASKA, KUUKPIK COORPORATION, BLM

P | N | D Incorporated CONSULTING ENGINEERS

ConocoPhillips Alaska, Inc.

AREA: 00 MODULE: XXXX UNIT: R1

ALPINE SATELLITE DEVELOPMENT PROGRAM
CD–3 (NORTH)
PROPOSED PIPE SECTION

CADD FILE NO.	DRAWING NO:	SHEET:	REV:
	CEA–R1XX–XXXX	015 OF 71	0

REV	DATE	BY	CK	APP	DESCRIPTION	REV	DATE	BY	CK	APP	DESCRIPTION
0	01/04	RLC	JWP	–	ISSUE FOR PERMIT						

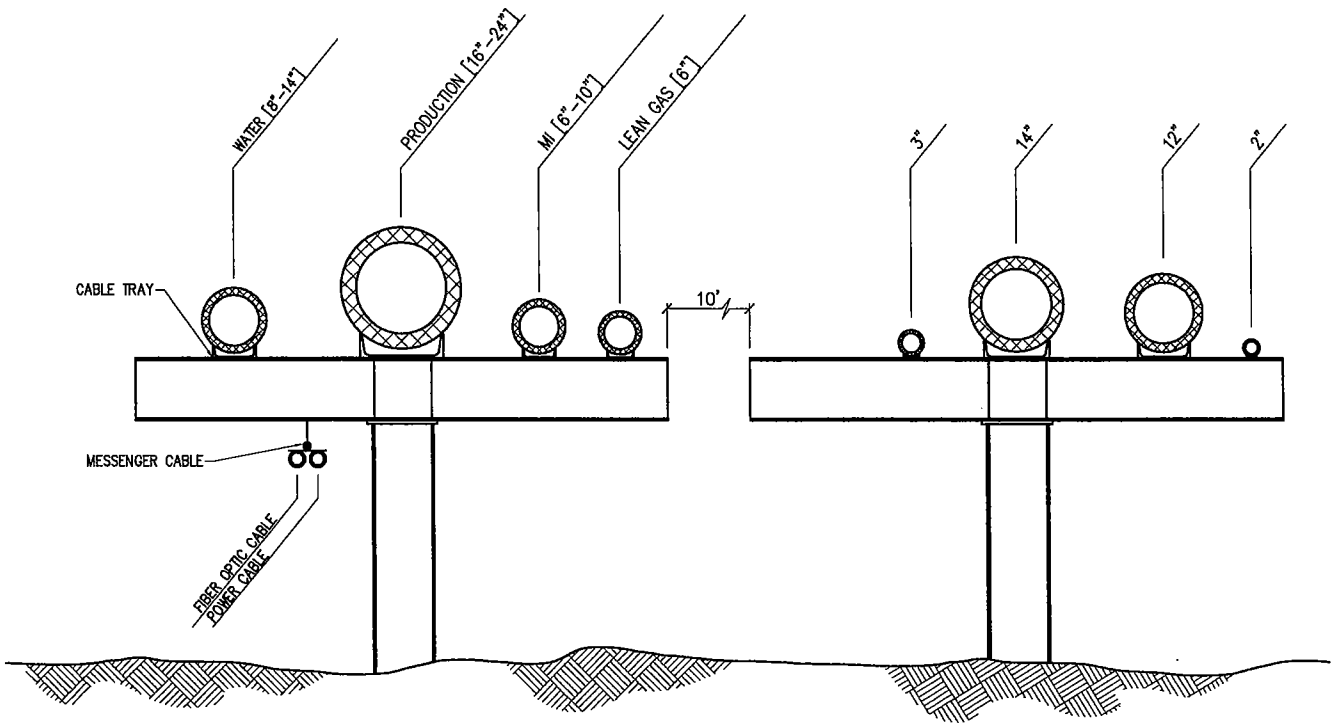

CD-4 TYPICAL SECTION

EXISTING ALPINE SALES PIPELINE

03-19-04

PURPOSE:
INSTALL VSM'S, ASSOCIATED PIPELINES AND UTILITIES.

DATUM:
BRITISH PETROLEUM MEAN SEA LEVEL

ADJACENT PROPERTY OWNERS:
STATE OF ALASKA, KUUKPIK COORPORATION, BLM

PND Incorporated CONSULTING ENGINEERS

ConocoPhillips Alaska, Inc.

AREA: 00 MODULE: XXXX UNIT: R1

ALPINE SATELLITE DEVELOPMENT PROGRAM
CD-4 (SOUTH)
PROPOSED PIPE SECTION

CADD FILE NO.	DRAWING NO:	SHEET:	REV:
	CEA-R1XX-XXXX	016 OF 71	0

REV	DATE	BY	CK	APP	DESCRIPTION	REV	DATE	BY	CK	APP	DESCRIPTION
0	01/04	RLC	JWP	–	ISSUE FOR PERMIT						

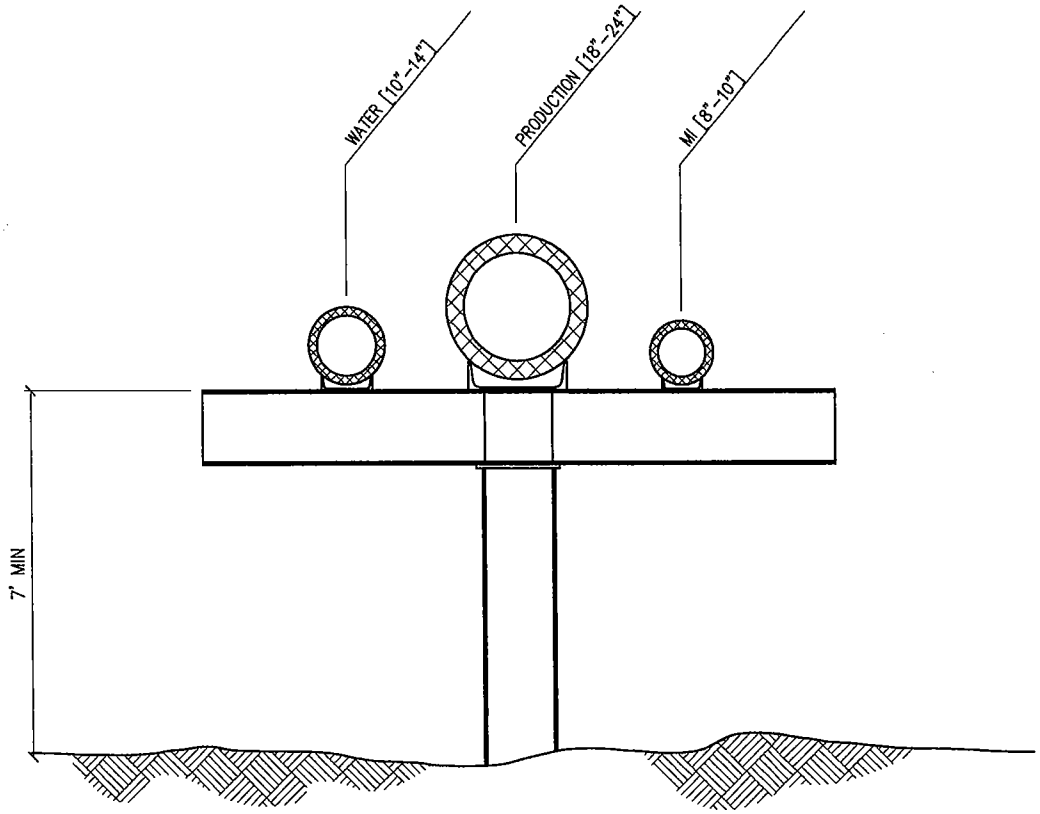

CD-5, CD-6 & CD-7 TYPICAL SECTION

03-19-04

PURPOSE:
INSTALL VSM'S, ASSOCIATED PIPELINES AND UTILITIES.

DATUM:
BRITISH PETROLEUM MEAN SEA LEVEL

ADJACENT PROPERTY OWNERS:
STATE OF ALASKA, KUUKPIK COORPORATION, BLM

PND Incorporated CONSULTING ENGINEERS

ConocoPhillips Alaska, Inc.

AREA: 00 MODULE: XXXX UNIT: R1

ALPINE SATELLITE DEVELOPMENT PROGRAM
CD-5(ALPINE WEST), CD-6(LOOKOUT)
& CD-7(SPARK) PROPOSED PIPE SECTION

CADD FILE NO.	DRAWING NO:	CEA-R1XX-XXXX	SHEET: 017 OF 71	REV: 0

REV	DATE	BY	CK	APP	DESCRIPTION	REV	DATE	BY	CK	APP	DESCRIPTION
0	01/04	RLC	JWP	–	ISSUE FOR PERMIT						

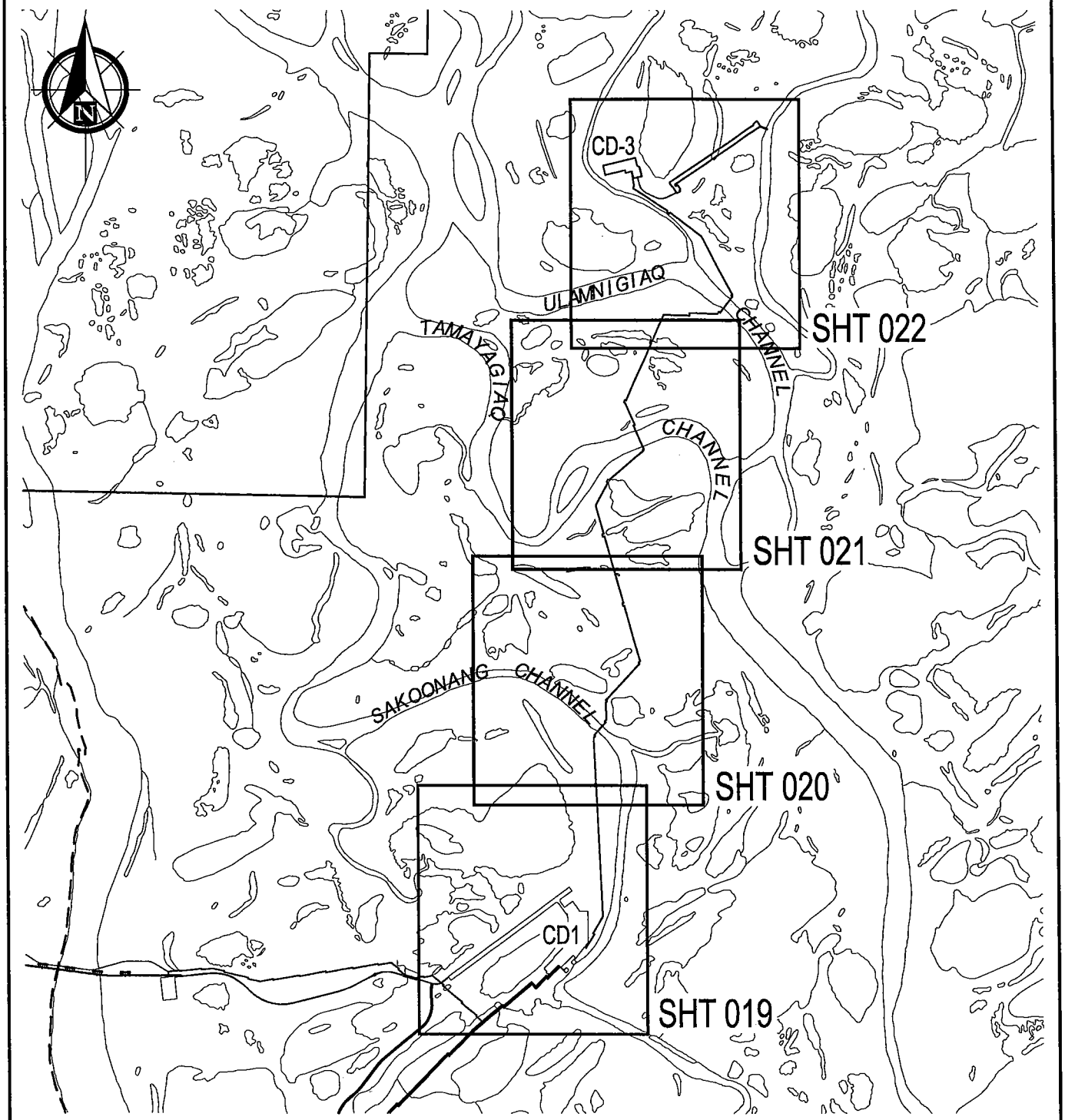

SCALE IN MILES

.5 0 .5 1 1.5

03-19-04

P N D Incorporated CONSULTING ENGINEERS

ConocoPhillips Alaska, Inc.

AREA: 00 MODULE: XXXX UNIT: R1

ALPINE SATELLITE DEVELOPMENT PROGRAM
CD-3 PIPELINE ROUTE – KEY MAP

CADD FILE NO. | DRAWING NO: | SHEET: | REV:

REV	DATE	BY	CK	APP	DESCRIPTION	REV	DATE	BY	CK	APP	DESCRIPTION
0	01/04	RLC	JWP	–	ISSUE FOR PERMIT						

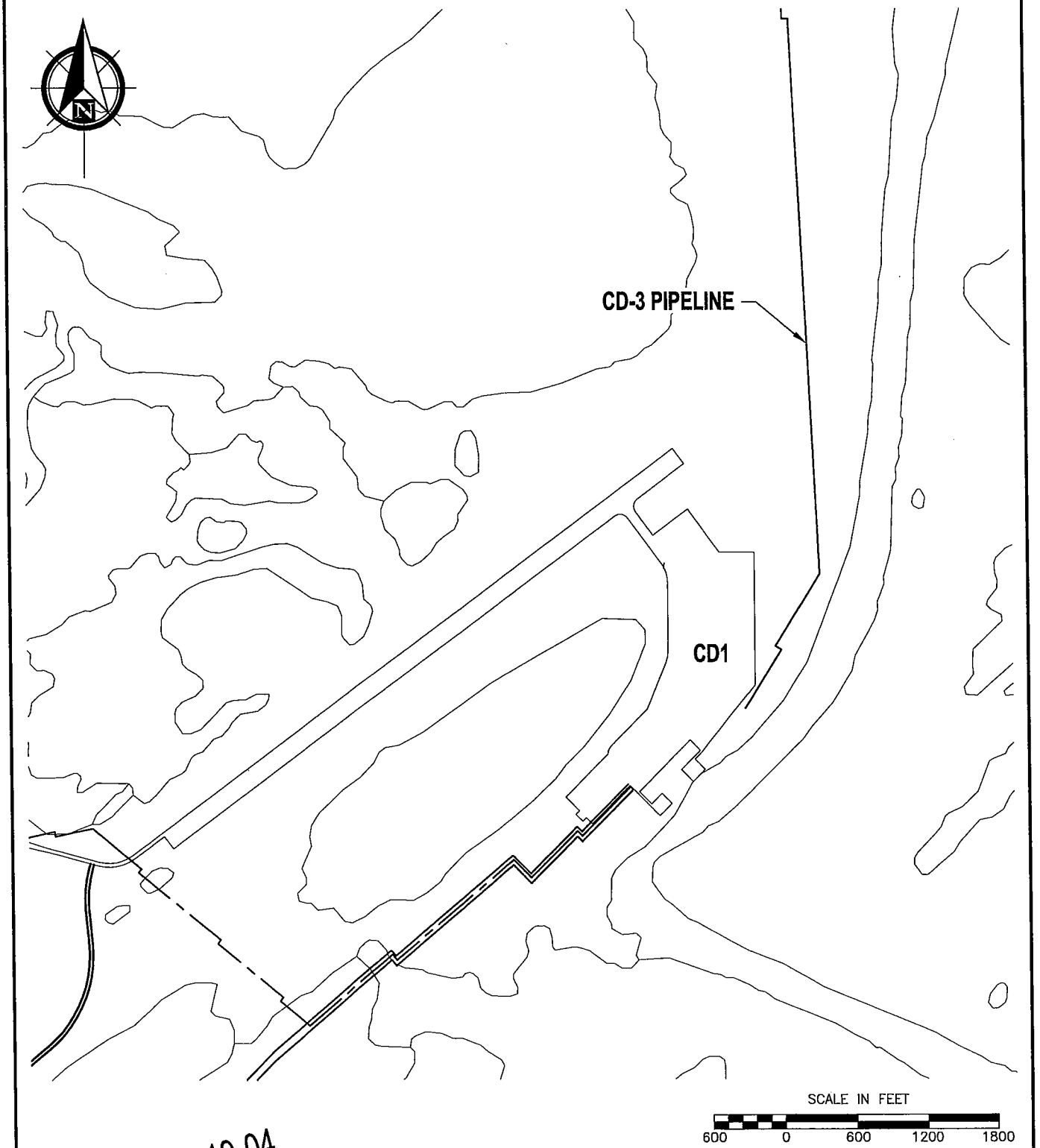

03-19-04

PND Incorporated CONSULTING ENGINEERS

ConocoPhillips Alaska, Inc.

AREA: 00 MODULE: XXXX UNIT: R1

ALPINE SATELLITE DEVELOPMENT PROGRAM
CD–3 PIPELINE ROUTE – SHEET 1

CADD FILE NO. | DRAWING NO: | SHEET: | REV:

REV	DATE	BY	CK	APP	DESCRIPTION	REV	DATE	BY	CK	APP	DESCRIPTION
0	01/04	RLC	JWP	–	ISSUE FOR PERMIT						

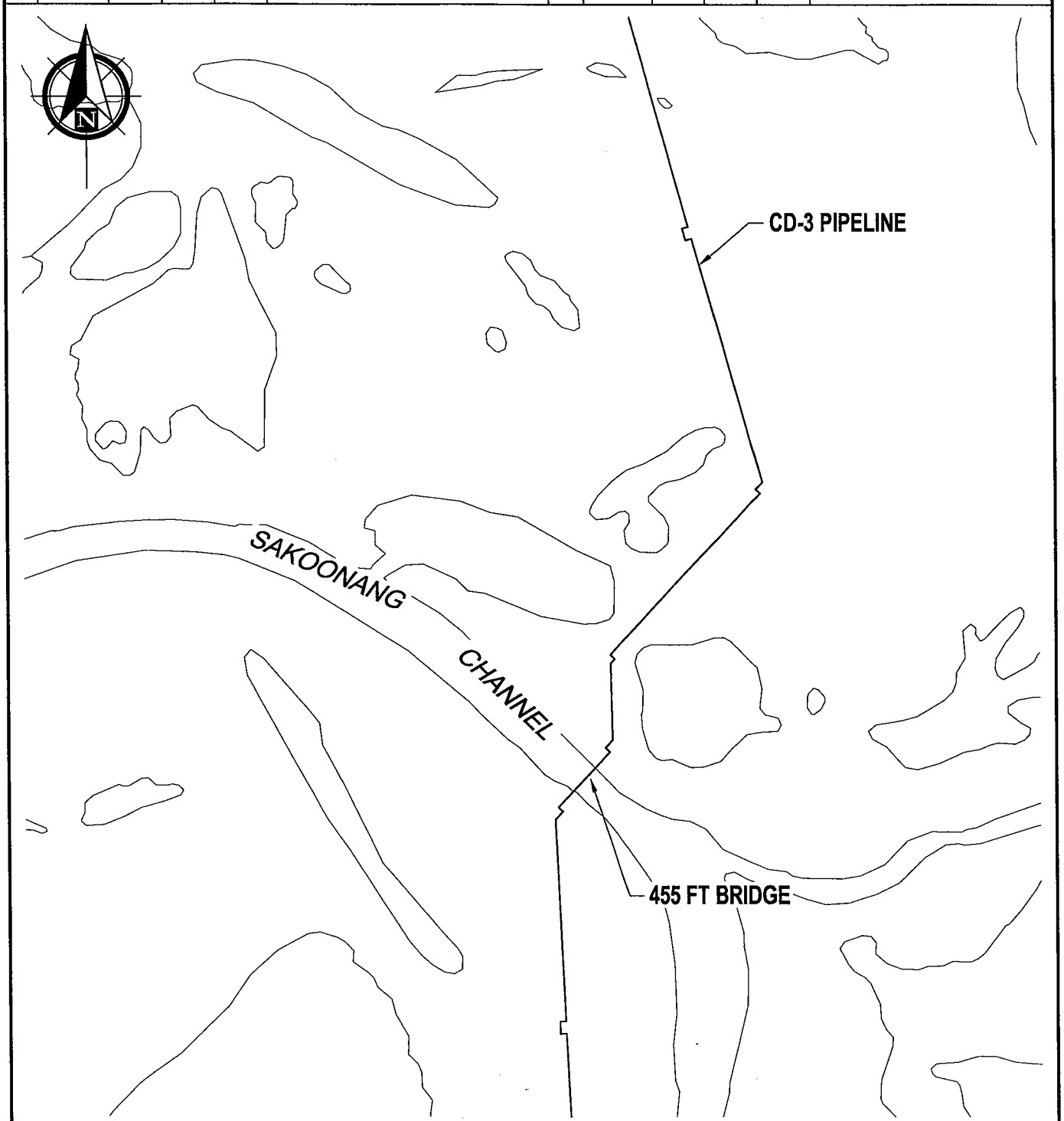

03-19-04

PND Incorporated CONSULTING ENGINEERS

ConocoPhillips Alaska, Inc.

AREA: 00 MODULE: XXXX UNIT: R1

ALPINE SATELLITE DEVELOPMENT PROGRAM
CD-3 PIPELINE ROUTE – SHEET 2

CADD FILE NO. | DRAWING NO: | SHEET: | REV:

REV	DATE	BY	CK	APP	DESCRIPTION	REV	DATE	BY	CK	APP	DESCRIPTION
0	01/04	RLC	JWP	–	ISSUE FOR PERMIT						

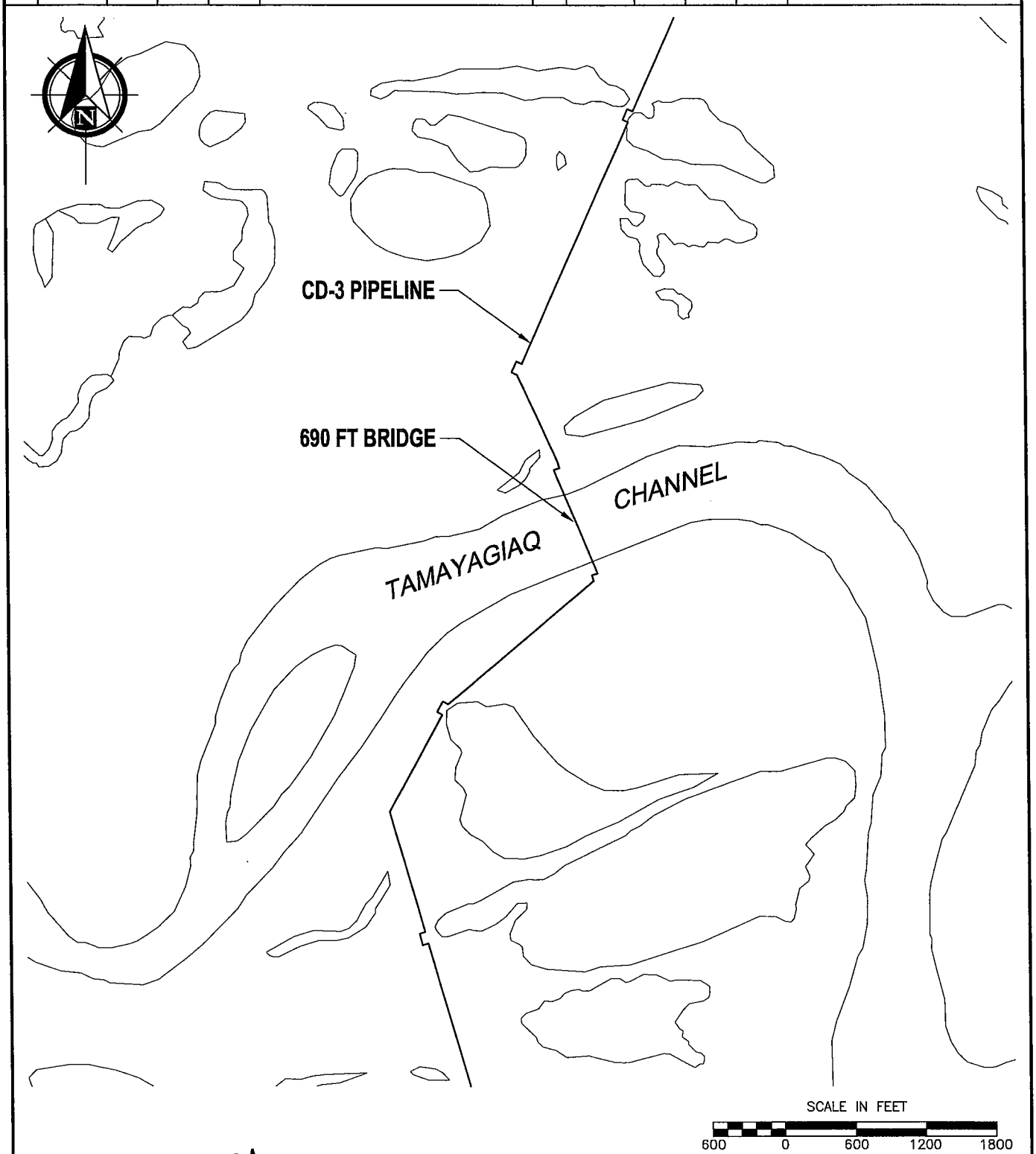

03-19-04

PND Incorporated CONSULTING ENGINEERS

ConocoPhillips Alaska, Inc.

AREA: 00 MODULE: XXXX UNIT: R1

ALPINE SATELLITE DEVELOPMENT PROGRAM
CD-3 PPELINE ROUTE – SHEET 3

CADD FILE NO. | DRAWING NO: | SHEET: | REV:

REV	DATE	BY	CK	APP	DESCRIPTION	REV	DATE	BY	CK	APP	DESCRIPTION
0	01/04	RLC	JWP	–	ISSUE FOR PERMIT						

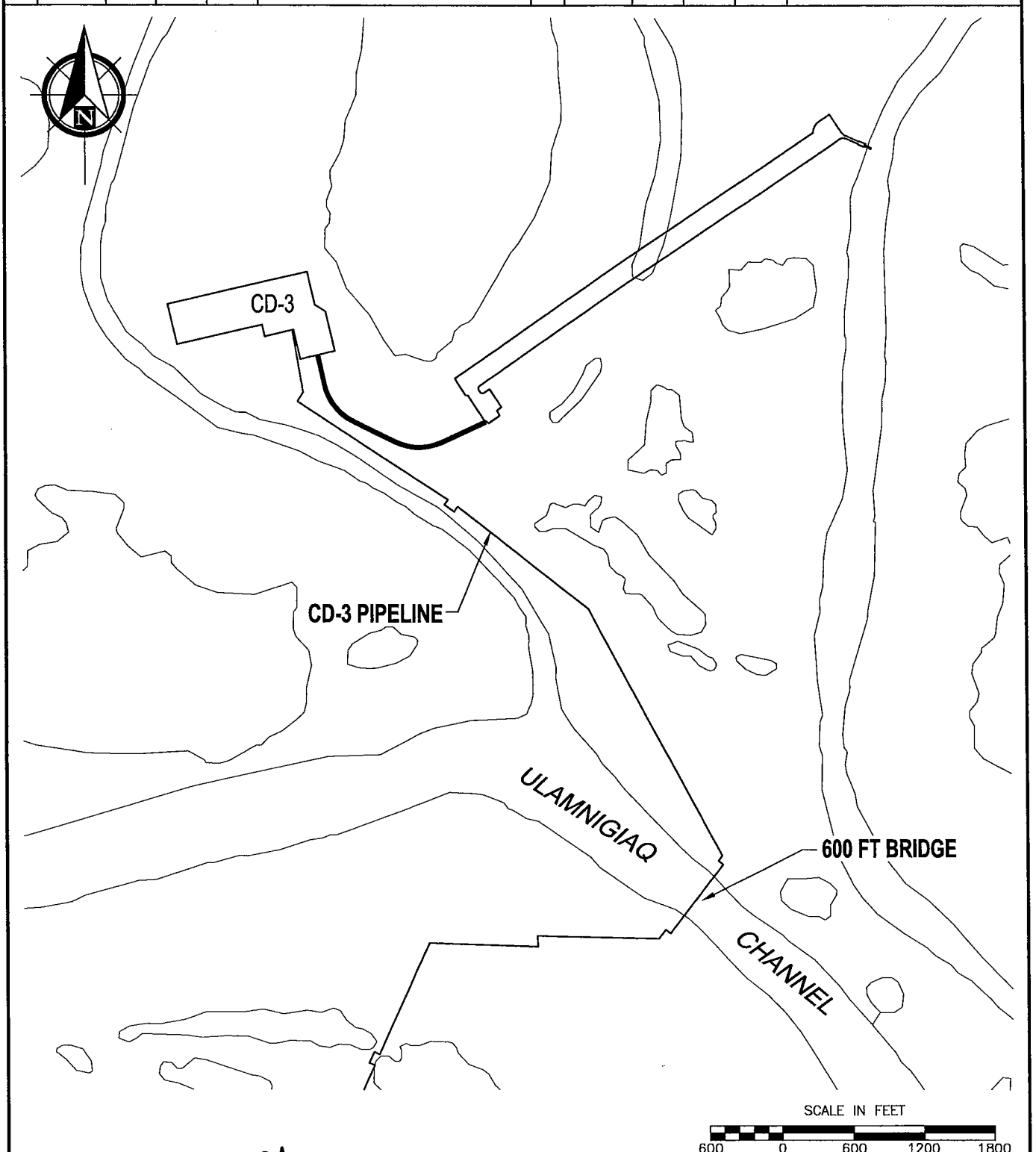

03-19-04

PND Incorporated CONSULTING ENGINEERS

ConocoPhillips Alaska, Inc.

AREA: 00 MODULE: XXXX UNIT: R1

ALPINE SATELLITE DEVELOPMENT PROGRAM
CD-3 PIPELINE ROUTE – SHEET 4

CADD FILE NO. | DRAWING NO: | SHEET: | REV:

REV	DATE	BY	CK	APP	DESCRIPTION	REV	DATE	BY	CK	APP	DESCRIPTION
0	01/04	RLC	JWP	–	ISSUE FOR PERMIT						

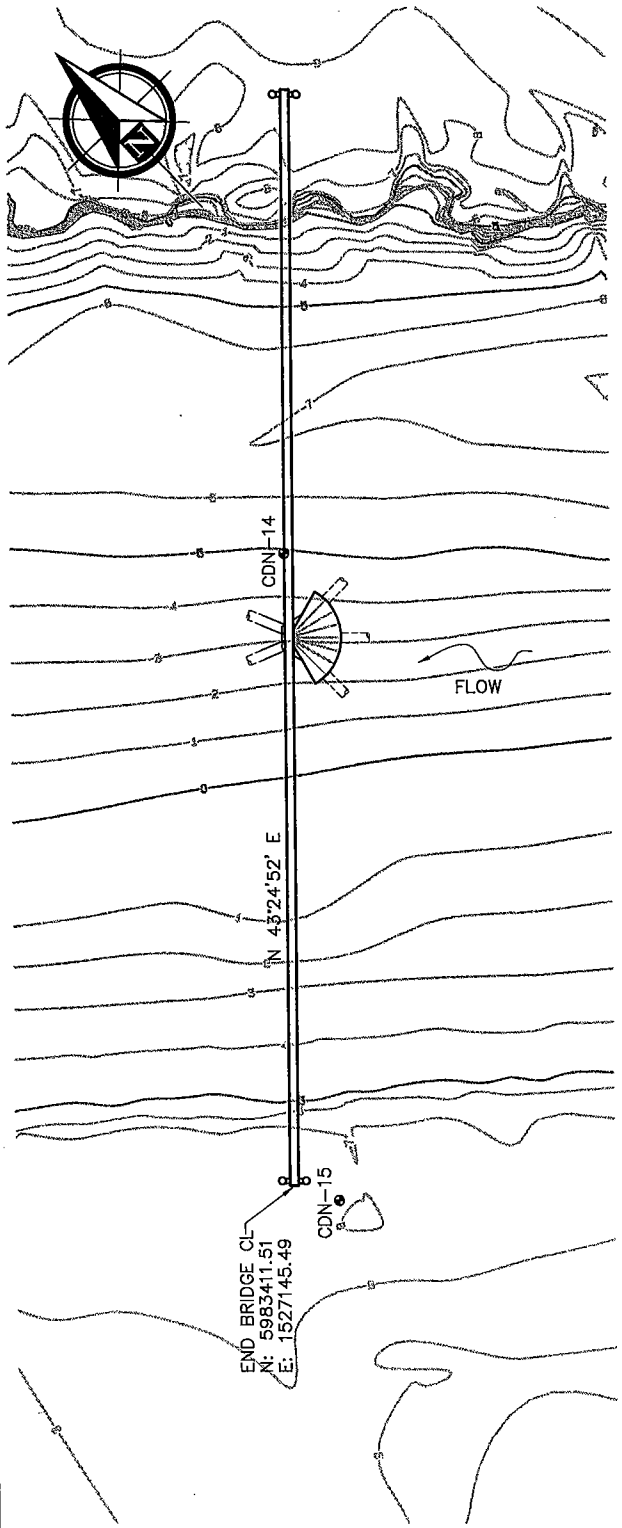

PLAN

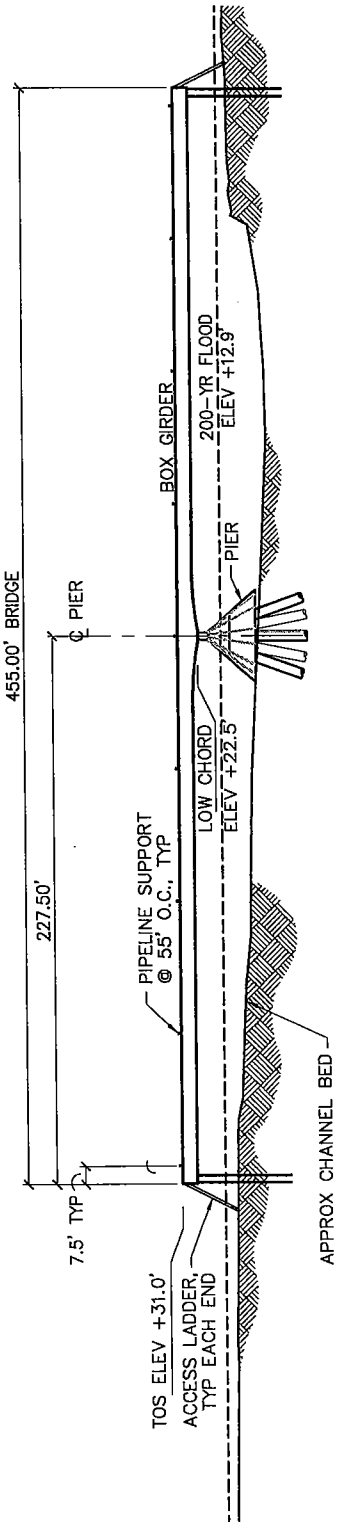

PROFILE

SCALE IN FEET

40 0 40 80 120

03-19-04

P N D Incorporated CONSULTING ENGINEERS

ConocoPhillips Alaska, Inc.

AREA: 00 MODULE: XXXX UNIT: R1

ALPINE SATELLITE DEVELOPMENT PROGRAM
CD-3 (NORTH) PIPELINE BRIDGE CROSSING
SAKOONANG CHANNEL

CADD FILE NO. | DRAWING NO: | SHEET: | REV:

REV	DATE	BY	CK	APP	DESCRIPTION	REV	DATE	BY	CK	APP	DESCRIPTION
0	01/04	RLC	JWP	–	ISSUE FOR PERMIT						

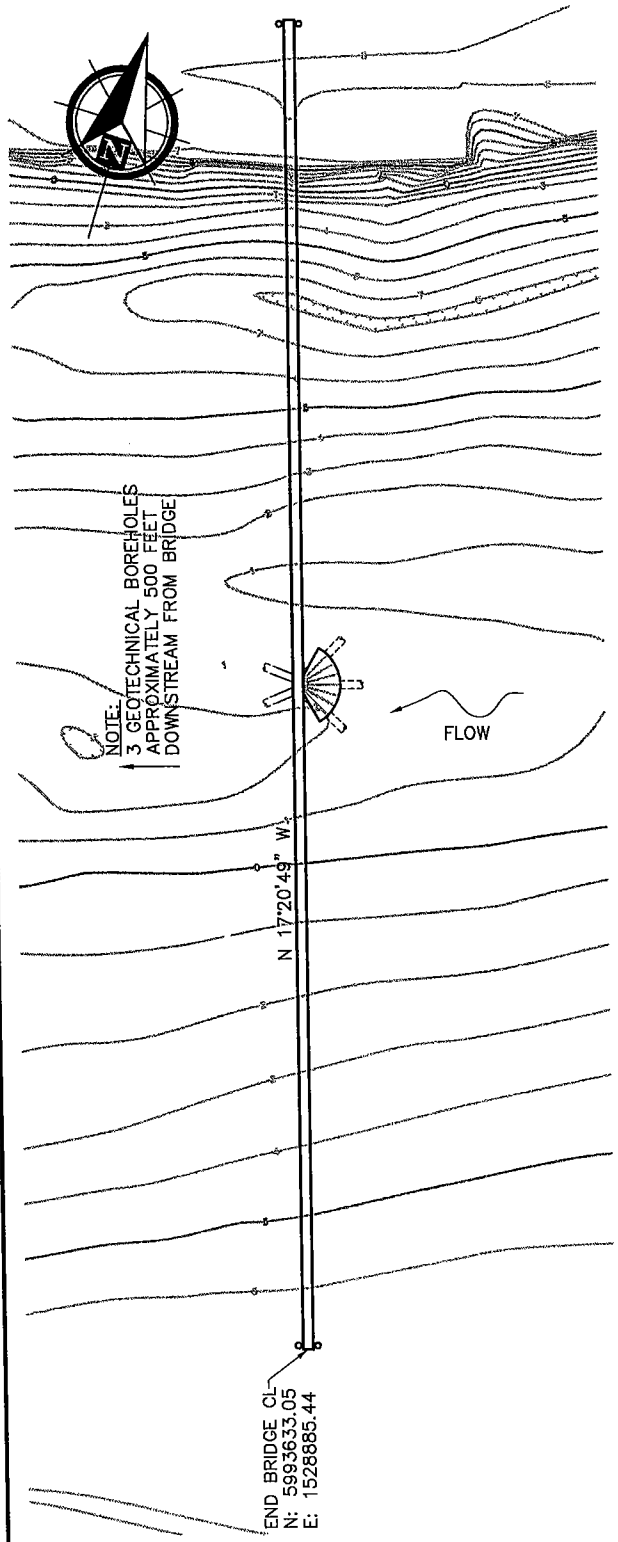

PLAN

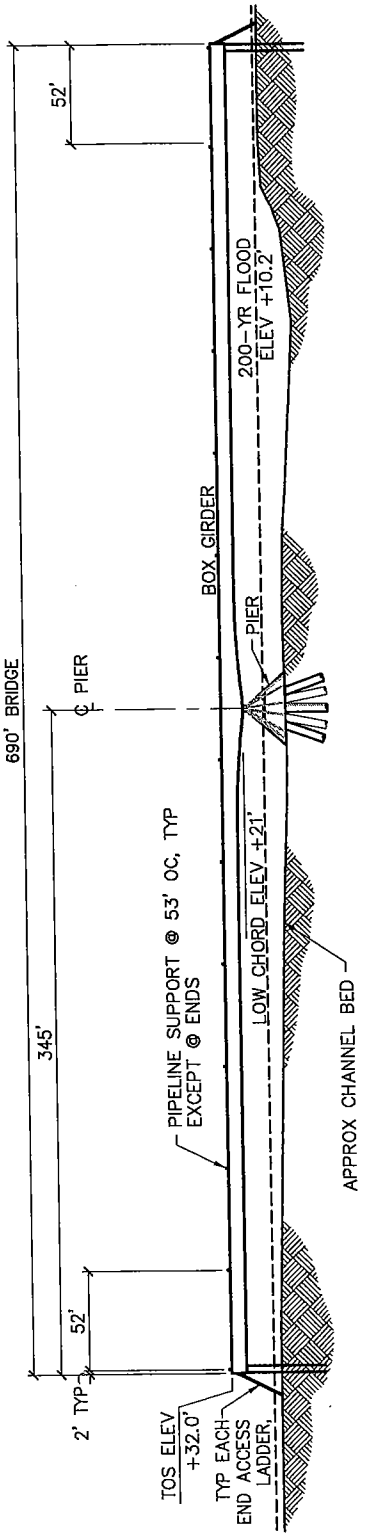

PROFILE

SCALE IN FEET

50 0 50 100 150

03-19-04

PND Incorporated CONSULTING ENGINEERS

ConocoPhillips Alaska, Inc.

AREA: 00 MODULE: XXXX UNIT: R1

ALPINE SATELLITE DEVELOPMENT PROGRAM
CD-3 (NORTH) PIPELINE BRIDGE CROSSING
TAMAYAGIAQ CHANNEL

CADD FILE NO | DRAWING NO: | SHEET: | REV:

REV	DATE	BY	CK	APP	DESCRIPTION	REV	DATE	BY	CK	APP	DESCRIPTION
0	01/04	RLC	JWP	–	ISSUE FOR PERMIT						

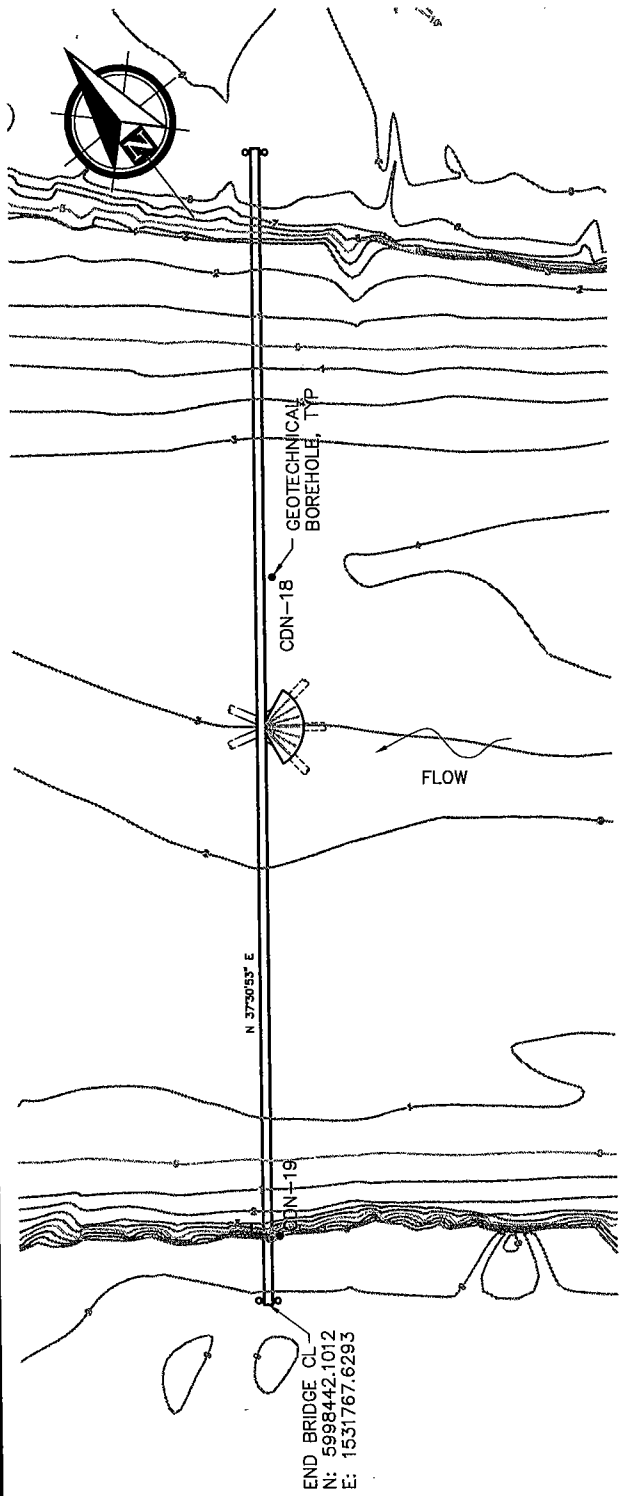

PLAN

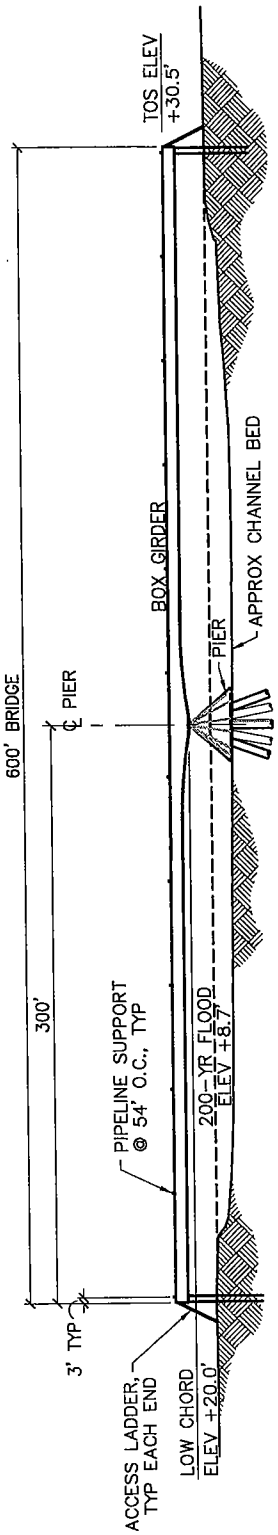

PROFILE

SCALE IN FEET

50 0 50 100 150

03-19-04

P N D Incorporated CONSULTING ENGINEERS

ConocoPhillips Alaska, Inc.

AREA: 00 MODULE: XXXX UNIT: R1

ALPINE SATELLITE DEVELOPMENT PROGRAM
CD-3 (NORTH) PIPELINE BRIDGE CROSSING
ULAMNIGIAQ CHANNEL

CADD FILE NO. | DRAWING NO: | SHEET: | REV:

REV	DATE	BY	CK	APP	DESCRIPTION	REV	DATE	BY	CK	APP	DESCRIPTION
0	01/04	RLC	JWP	–	ISSUE FOR PERMIT						

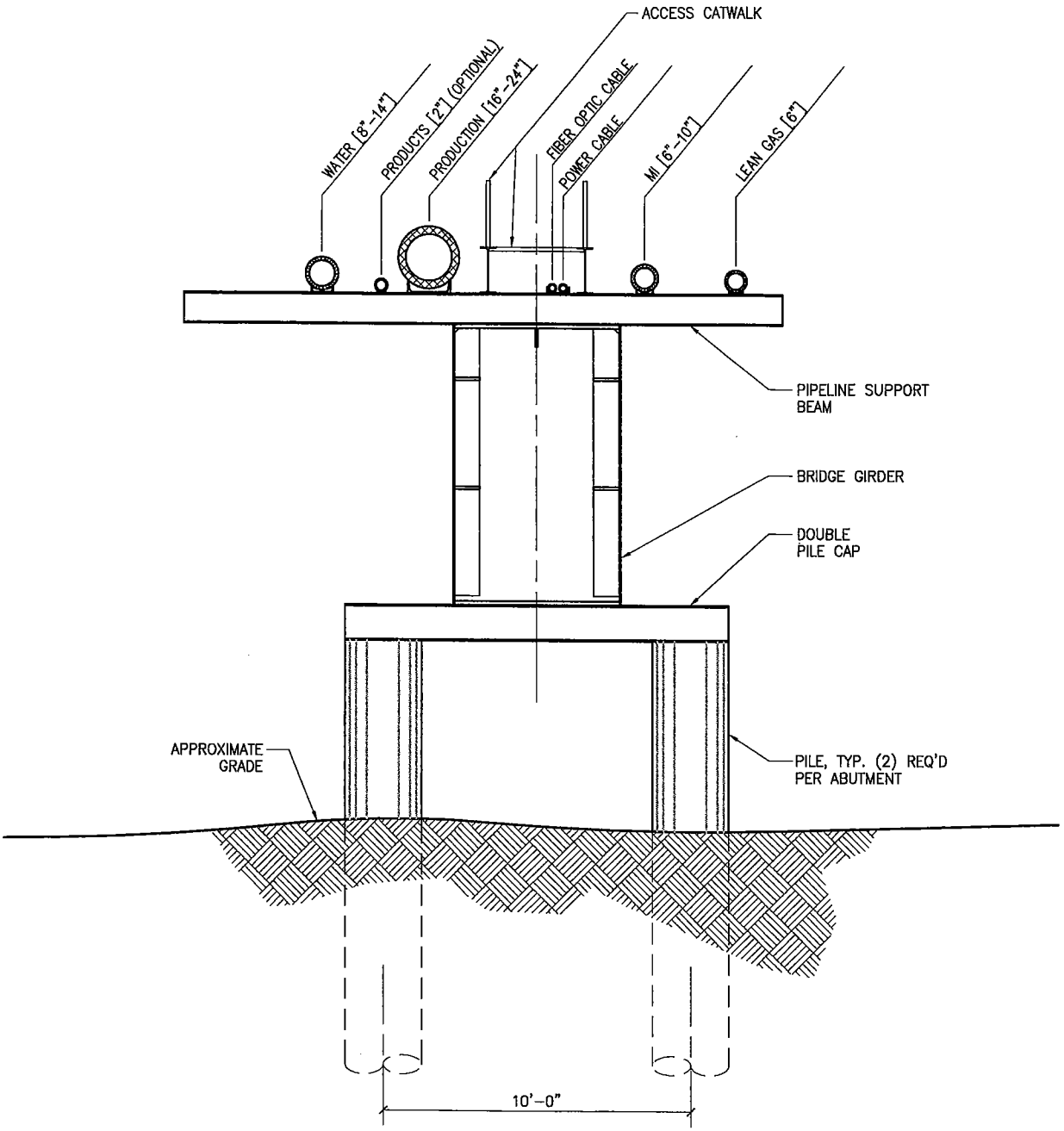

ELEVATION

03-19-04

PND Incorporated CONSULTING ENGINEERS

ConocoPhillips Alaska, Inc.

AREA: 00 MODULE: XXXX UNIT: R1

ALPINE SATELLITE DEVELOPMENT PROGRAM
TYPICAL ABUTMENT FOUNDATION ELEVATION

CADD FILE NO. | DRAWING NO: CEA-R1XX-XXXX | SHEET: | REV:

REV	DATE	BY	CK	APP	DESCRIPTION	REV	DATE	BY	CK	APP	DESCRIPTION
0	01/04	RLC	JWP	–	ISSUE FOR PERMIT						

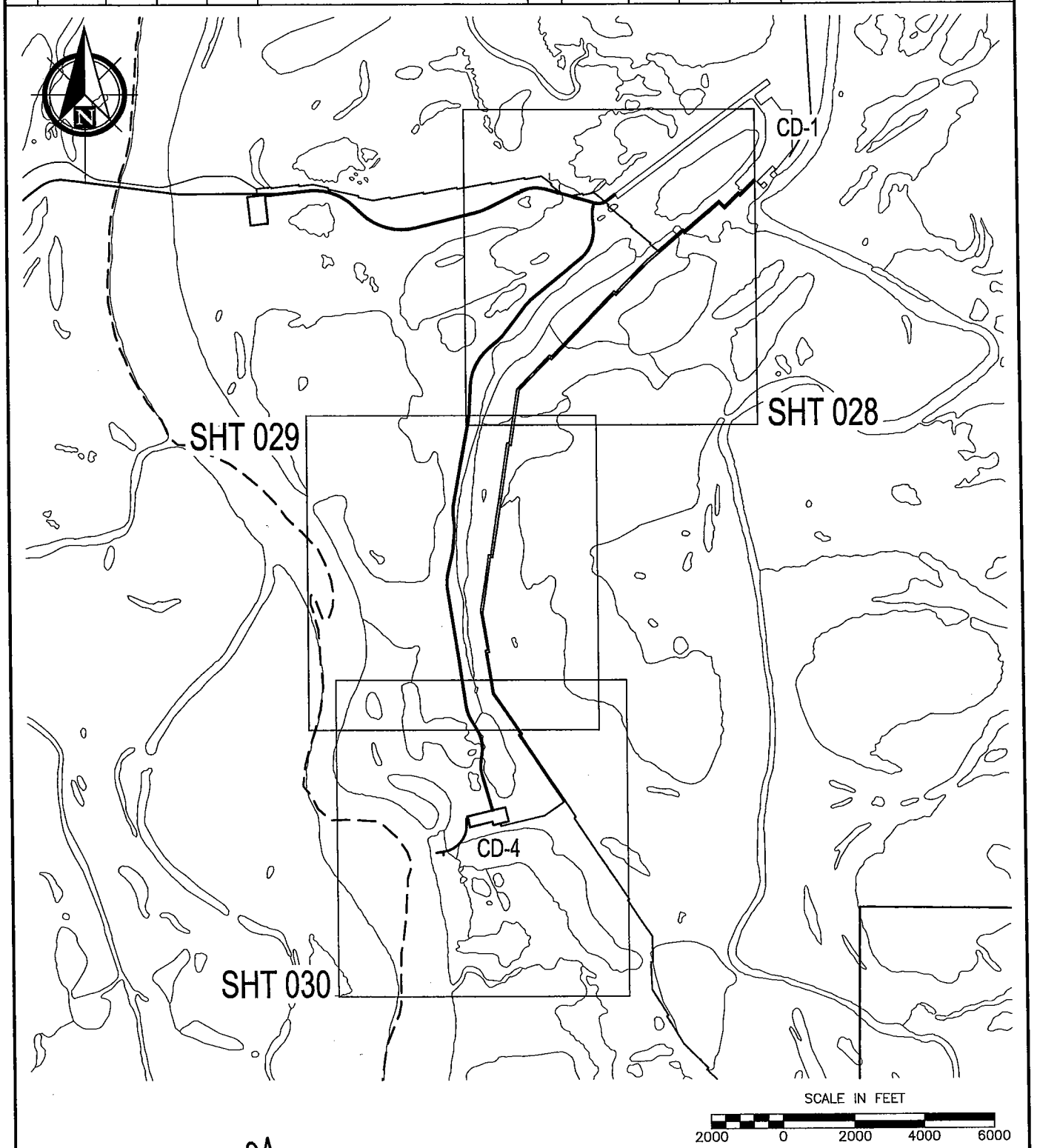

03-19-04

P N D Incorporated CONSULTING ENGINEERS

ConocoPhillips Alaska, Inc.

AREA: 00 MODULE: XXXX UNIT: R1

ALPINE SATELLITE DEVELOPMENT PROGRAM
CD-4 ROAD AND PIPELINE ROUTE
KEY MAP

CADD FILE NO. | DRAWING NO: | SHEET: | REV:

REV	DATE	BY	CK	APP	DESCRIPTION	REV	DATE	BY	CK	APP	DESCRIPTION
0	01/04	RLC	JWP	–	ISSUE FOR PERMIT						

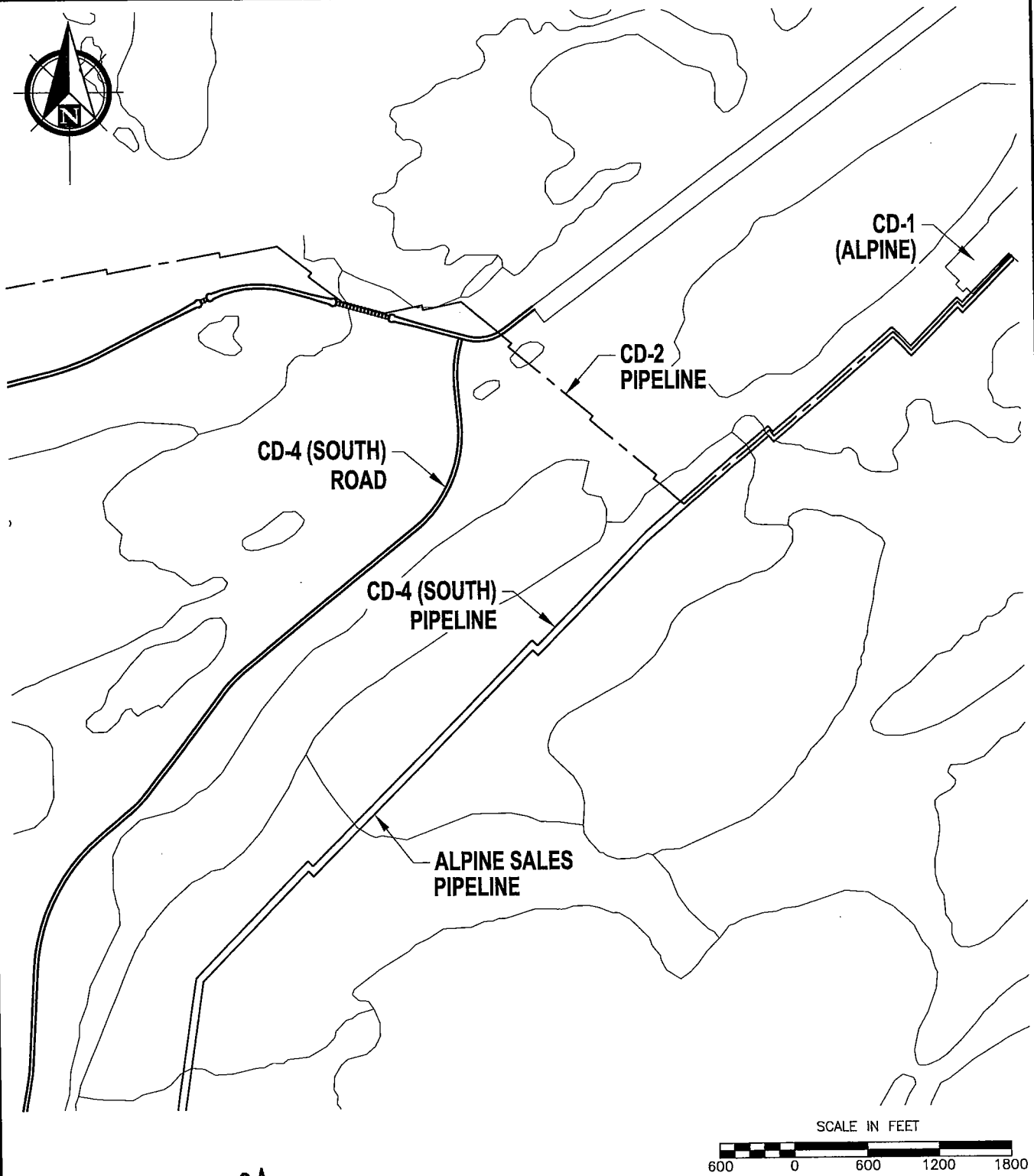

03-19-04

P | N | D Incorporated CONSULTING ENGINEERS

ConocoPhillips Alaska, Inc.

AREA: 00 MODULE: XXXX UNIT: R1

ALPINE SATELLITE DEVELOPMENT PROGRAM
CD–4 ROAD AND PIPELINE ROUTE
SHEET 1

CADD FILE NO. | DRAWING NO: | SHEET: | REV:

REV	DATE	BY	CK	APP	DESCRIPTION	REV	DATE	BY	CK	APP	DESCRIPTION
0	01/04	RLC	JWP	–	ISSUE FOR PERMIT						

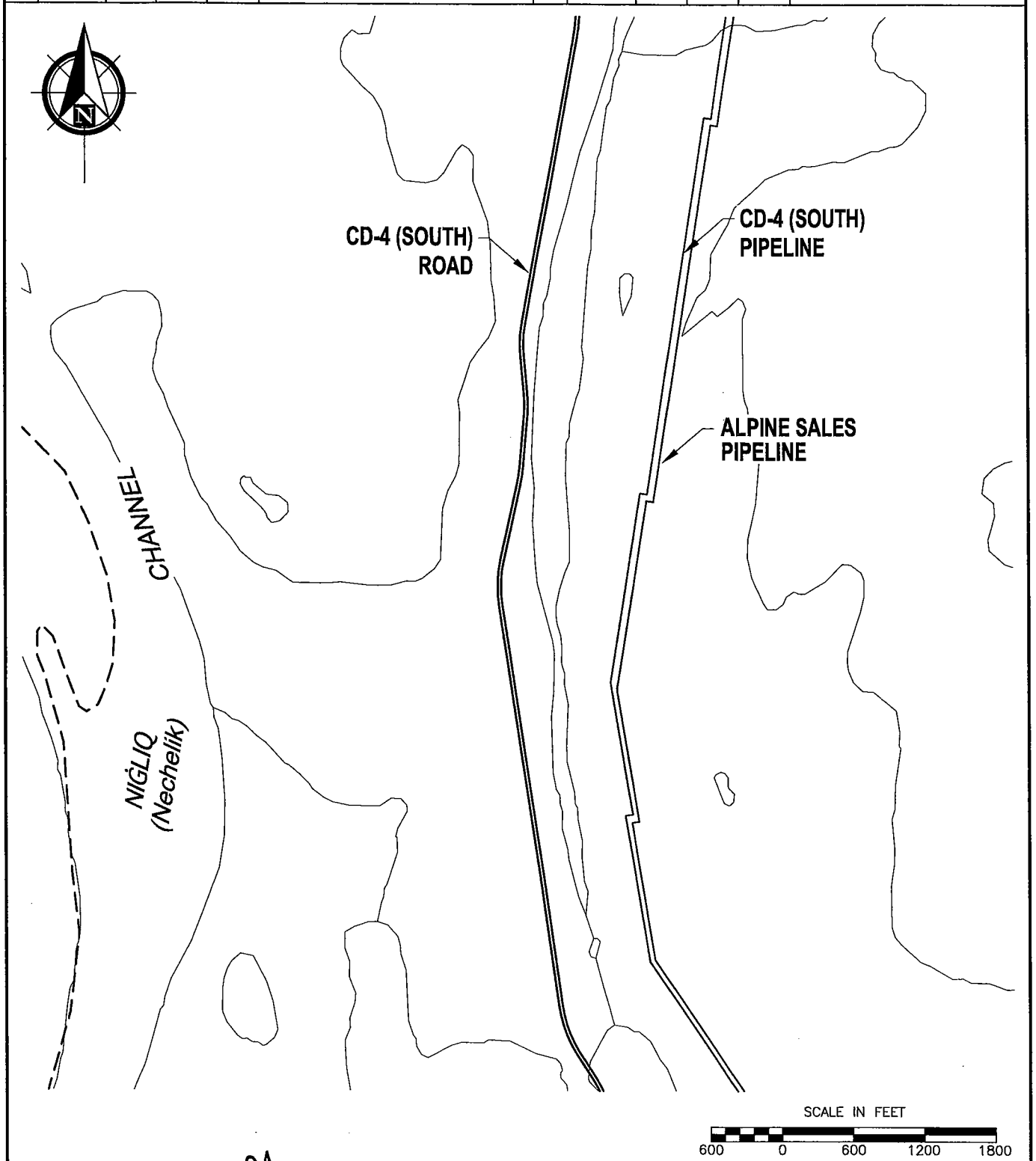

03-19-04

PND Incorporated CONSULTING ENGINEERS

ConocoPhillips Alaska, Inc.

AREA: 00 MODULE: XXXX UNIT: R1

ALPINE SATELLITE DEVELOPMENT PROGRAM
CD-4 ROAD AND PIPELINE ROUTE
SHEET 2

CADD FILE NO. | DRAWING NO: | SHEET: | REV:

REV	DATE	BY	CK	APP	DESCRIPTION	REV	DATE	BY	CK	APP	DESCRIPTION
0	01/04	RLC	JWP	–	ISSUE FOR PERMIT						

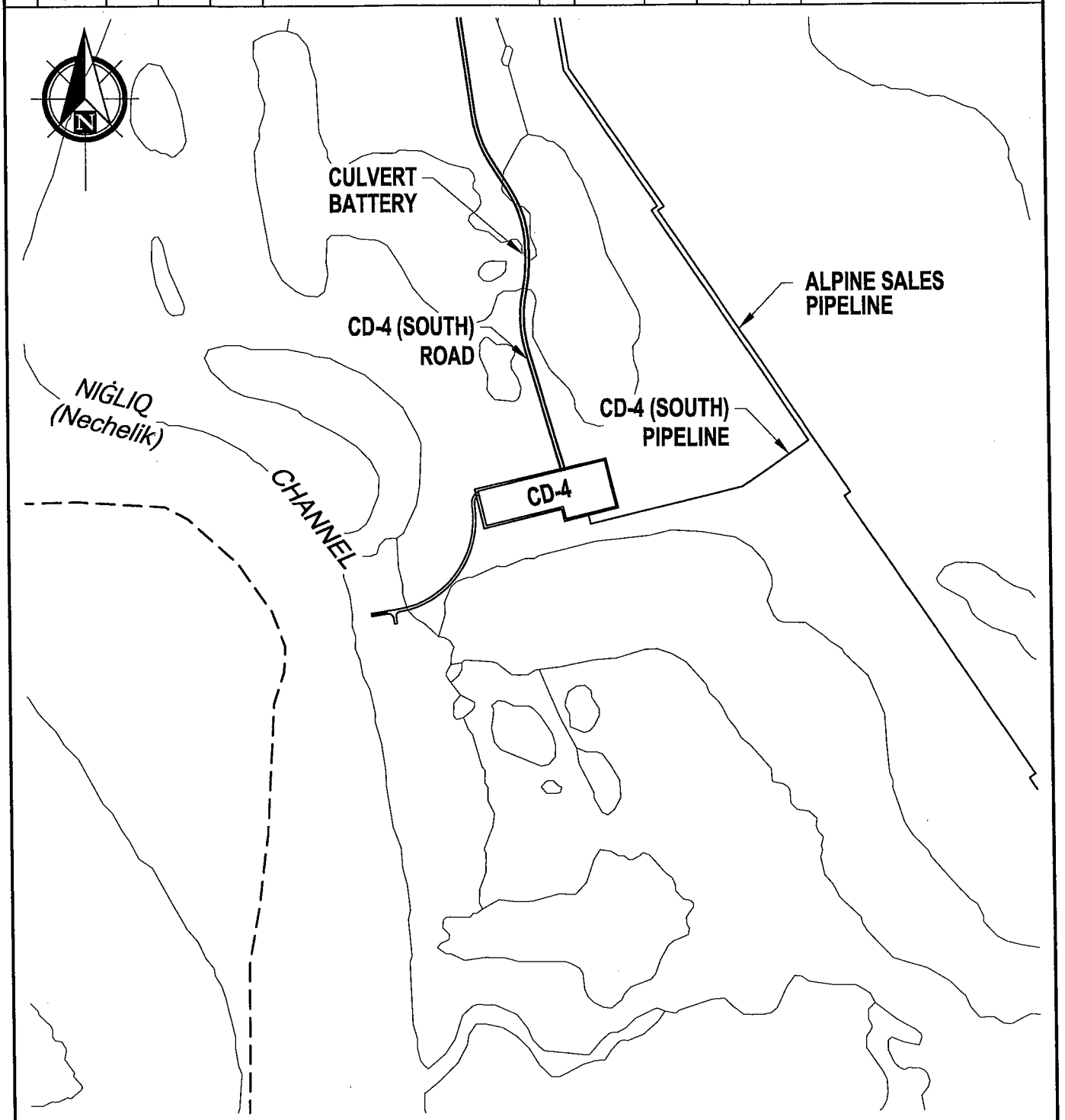

03-19-04

PND Incorporated CONSULTING ENGINEERS

ConocoPhillips Alaska, Inc.

AREA: 00 MODULE: XXXX UNIT: R1

ALPINE SATELLITE DEVELOPMENT PROGRAM
CD-4 ROAD AND PIPELINE ROUTE
SHEET 3

CADD FILE NO. | DRAWING NO: | SHEET: | REV:

REV	DATE	BY	CK	APP	DESCRIPTION	REV	DATE	BY	CK	APP	DESCRIPTION
0	01/04	RLC	JWP	–	ISSUE FOR PERMIT						

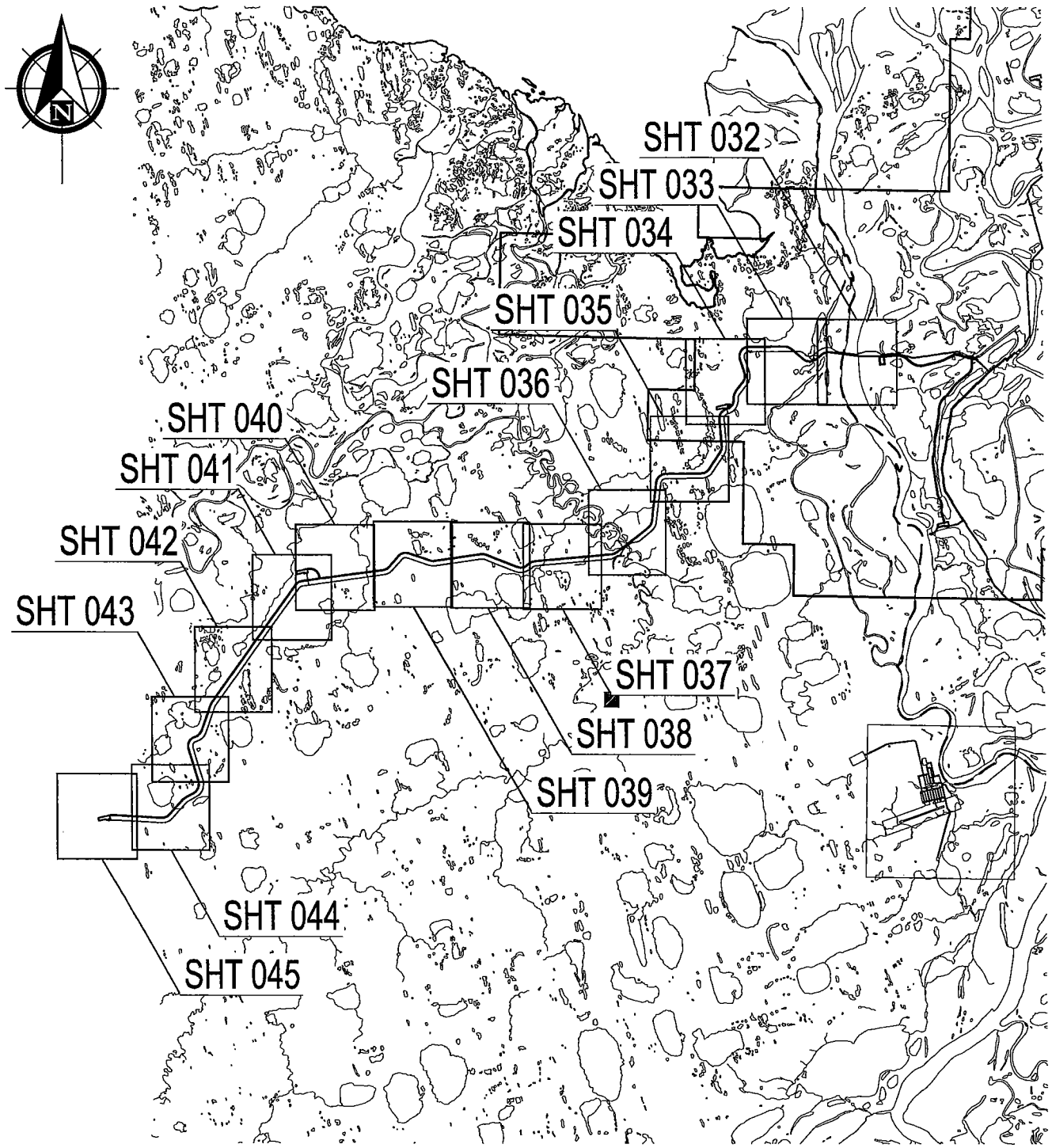

SCALE IN MILES

1.5 0 1.5 3 4.5

03-19-04

P N D Incorporated CONSULTING ENGINEERS

ConocoPhillips Alaska, Inc.

AREA: 00 MODULE: XXXX UNIT: R1

ALPINE SATELLITE DEVELOPMENT PROGRAM
NPRA ACCESS ROAD AND PIPELINE ROUTE
KEY MAP

CADD FILE NO.	DRAWING NO:	SHEET:	REV:
	CEA–R1XX–XXXX	031 OF 71	0

REV	DATE	BY	CK	APP	DESCRIPTION	REV	DATE	BY	CK	APP	DESCRIPTION
0	01/04	RLC	JWP	–	ISSUE FOR PERMIT						

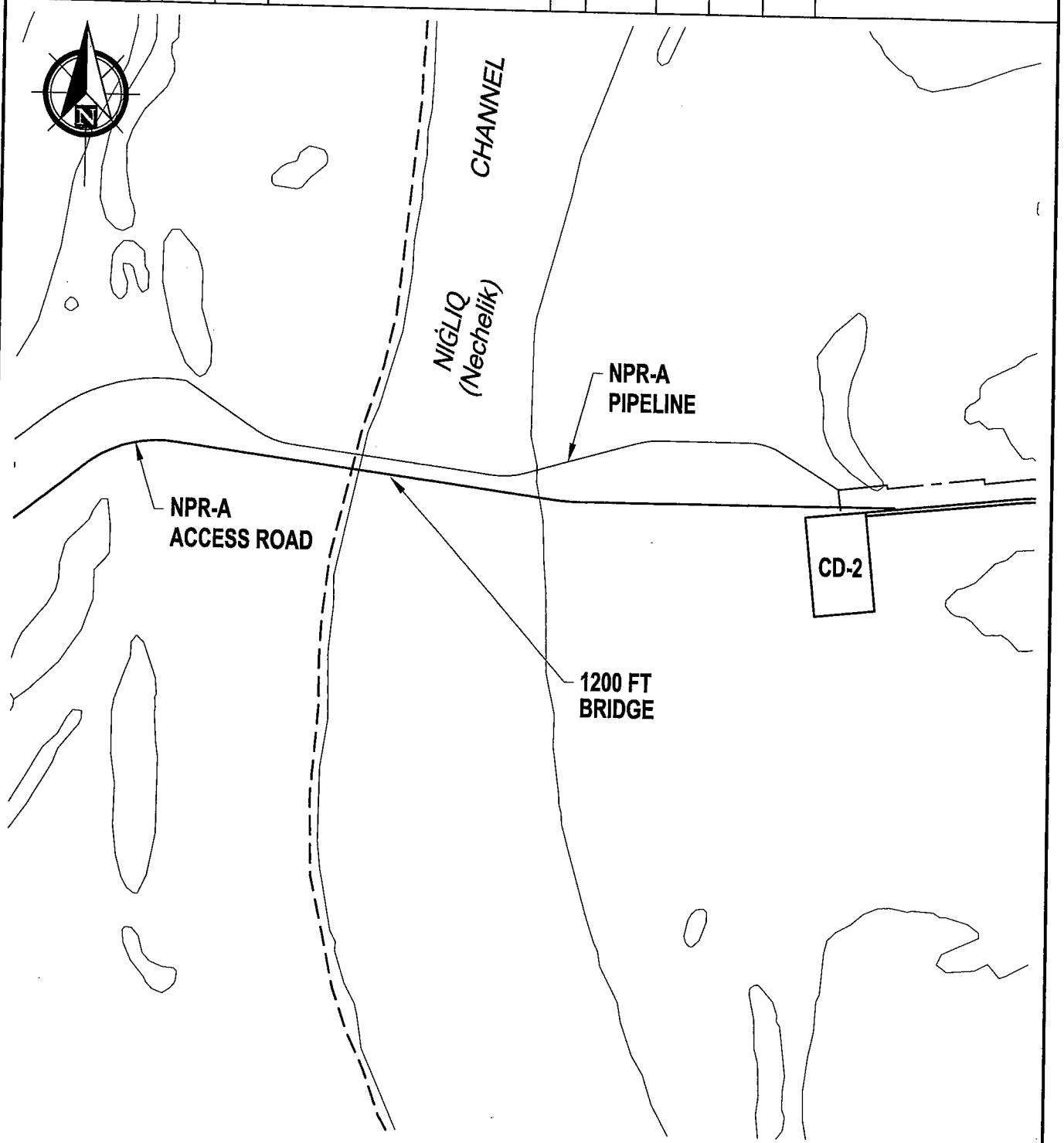

03-19-04

PND Incorporated CONSULTING ENGINEERS

ConocoPhillips Alaska, Inc.

AREA: 00 MODULE: XXXX UNIT: R1

ALPINE SATELLITE DEVELOPMENT PROGRAM
NPRA ACCESS ROAD AND PIPELINE ROUTE
SHEET 1

CADD FILE NO.

DRAWING NO: CEA–R1XX–XXXX

SHEET: 032 OF 71

REV: 0

PND CAD File: J:\2001\01117.01 NPRA-EIS\Permitting\Drawings\- Dwg Package A\32 - NPR-A Access Road Sht 01.dwg Mar 19 2004 REV0

REV	DATE	BY	CK	APP	DESCRIPTION	REV	DATE	BY	CK	APP	DESCRIPTION
0	01/04	RLC	JWP	–	ISSUE FOR PERMIT						

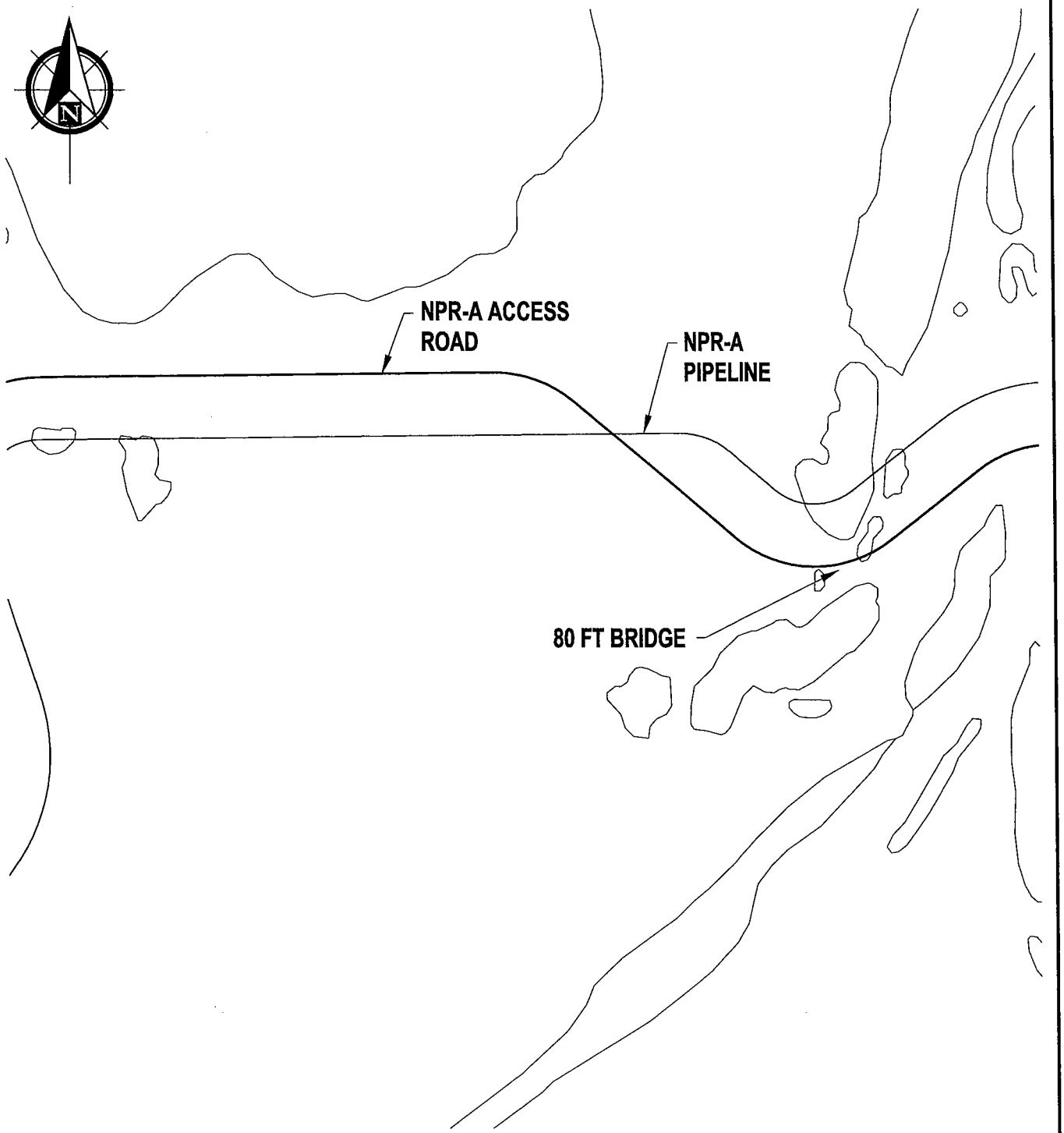

SCALE IN FEET

600 0 600 1200 1800

03-19-04

PND Incorporated CONSULTING ENGINEERS

ConocoPhillips Alaska, Inc.

AREA: 00 MODULE: XXXX UNIT: R1

ALPINE SATELLITE DEVELOPMENT PROGRAM
NPRA ACCESS ROAD AND PIPELINE ROUTE
SHEET 2

CADD FILE NO.	DRAWING NO:	SHEET:	REV:
	CEA–R1XX–XXXX	033 OF 71	0

REV	DATE	BY	CK	APP	DESCRIPTION	REV	DATE	BY	CK	APP	DESCRIPTION
0	01/04	RLC	JWP	–	ISSUE FOR PERMIT						

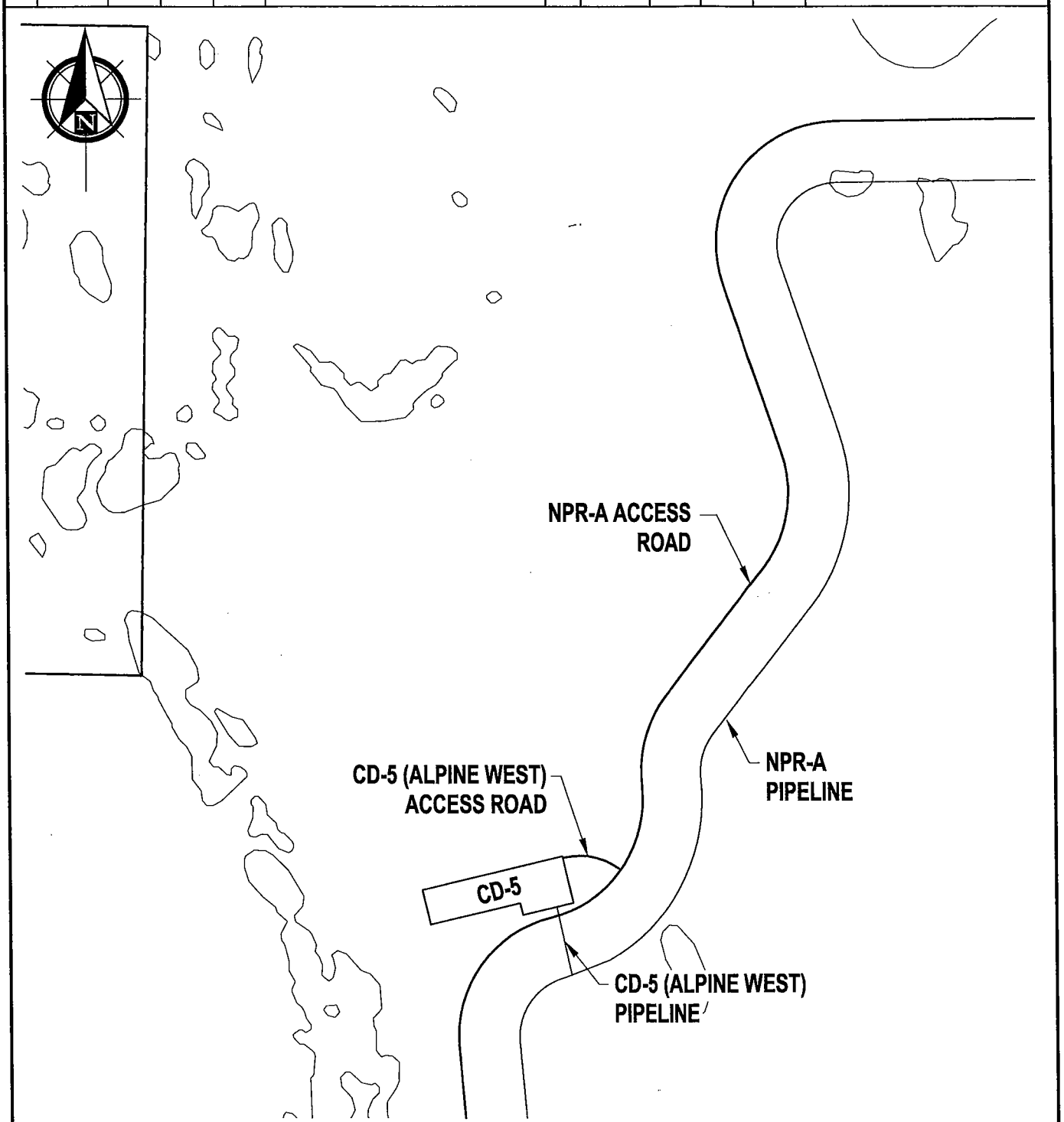

03-19-04

P N D Incorporated CONSULTING ENGINEERS

ConocoPhillips Alaska, Inc.

AREA: 00 MODULE: XXXX UNIT: R1

ALPINE SATELLITE DEVELOPMENT PROGRAM
NPRA ACCESS ROAD AND PIPELINE ROUTE
SHEET 3

CADD FILE NO.	DRAWING NO:	SHEET:	REV:
	CEA–R1XX–XXXX	034 OF 71	0

REV	DATE	BY	CK	APP	DESCRIPTION	REV	DATE	BY	CK	APP	DESCRIPTION
0	01/04	RLC	JWP	–	ISSUE FOR PERMIT						

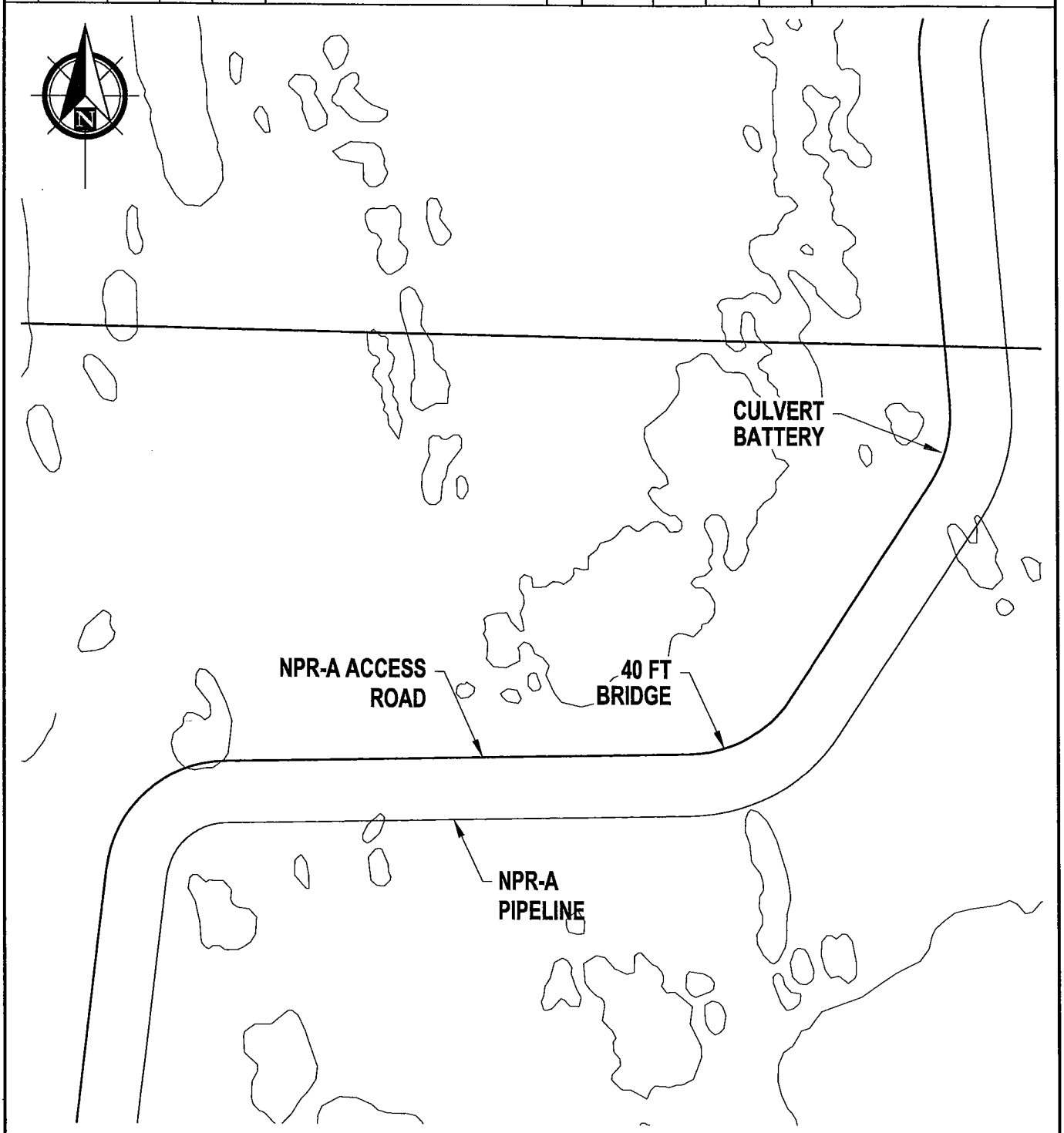

03-19-04

PND Incorporated CONSULTING ENGINEERS

ConocoPhillips Alaska, Inc.

AREA: 00 MODULE: XXXX UNIT: R1

ALPINE SATELLITE DEVELOPMENT PROGRAM
NPRA ACCESS ROAD AND PIPELINE ROUTE
SHEET 4

CADD FILE NO.	DRAWING NO:	SHEET:	REV:
	CEA–R1XX–XXXX	035 OF 71	0

REV	DATE	BY	CK	APP	DESCRIPTION	REV	DATE	BY	CK	APP	DESCRIPTION
0	01/04	RLC	JWP	–	ISSUE FOR PERMIT						

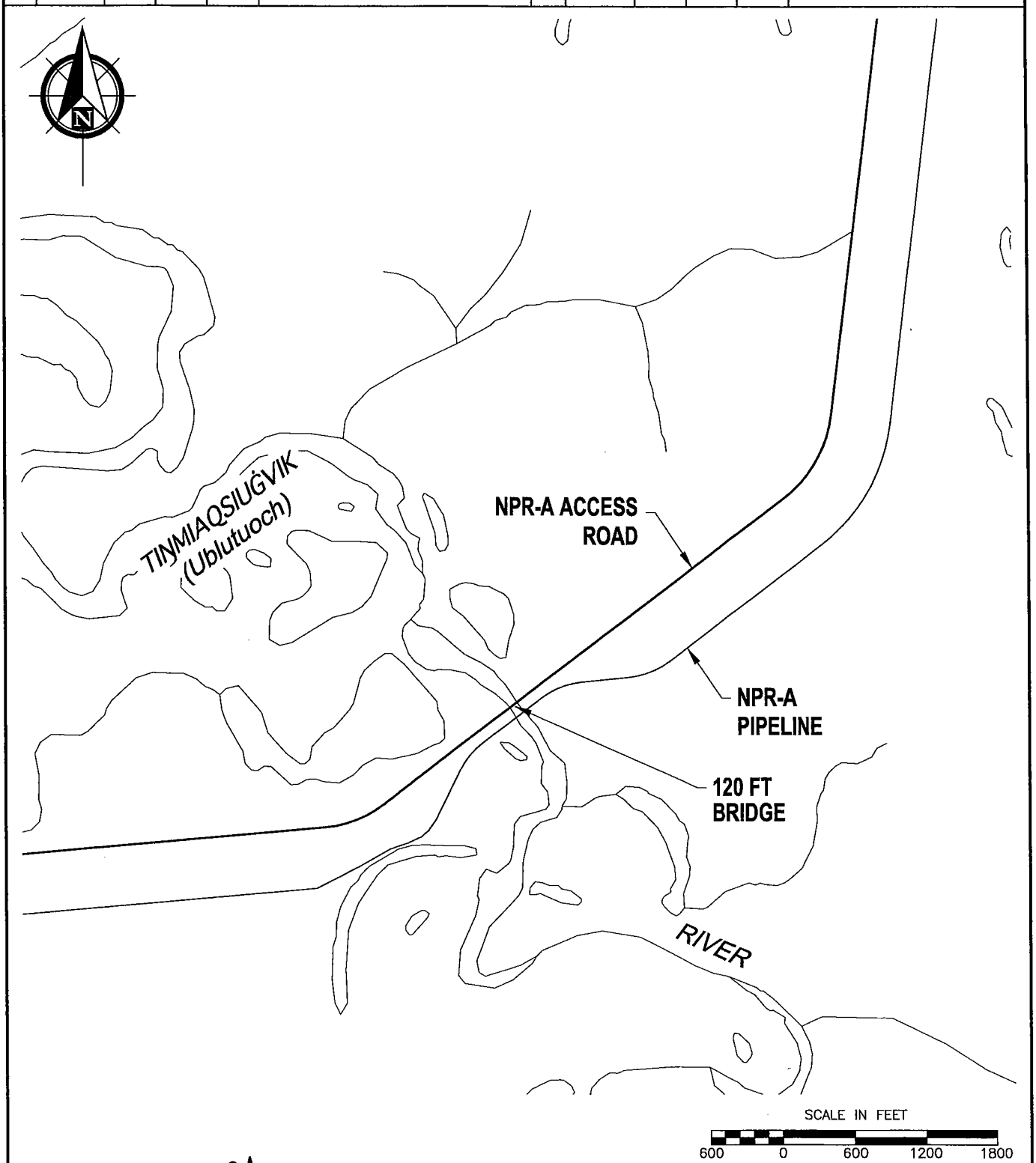

03-19-04

P | N | D Incorporated CONSULTING ENGINEERS

ConocoPhillips Alaska, Inc.

AREA: 00 MODULE: XXXX UNIT: R1

ALPINE SATELLITE DEVELOPMENT PROGRAM
NPRA ACCESS ROAD AND PIPELINE ROUTE
SHEET 5

CADD FILE NO.	DRAWING NO:	SHEET:	REV:
	CEA–R1XX–XXXX	036 OF 71	0

REV	DATE	BY	CK	APP	DESCRIPTION	REV	DATE	BY	CK	APP	DESCRIPTION
0	01/04	RLC	JWP	–	ISSUE FOR PERMIT						

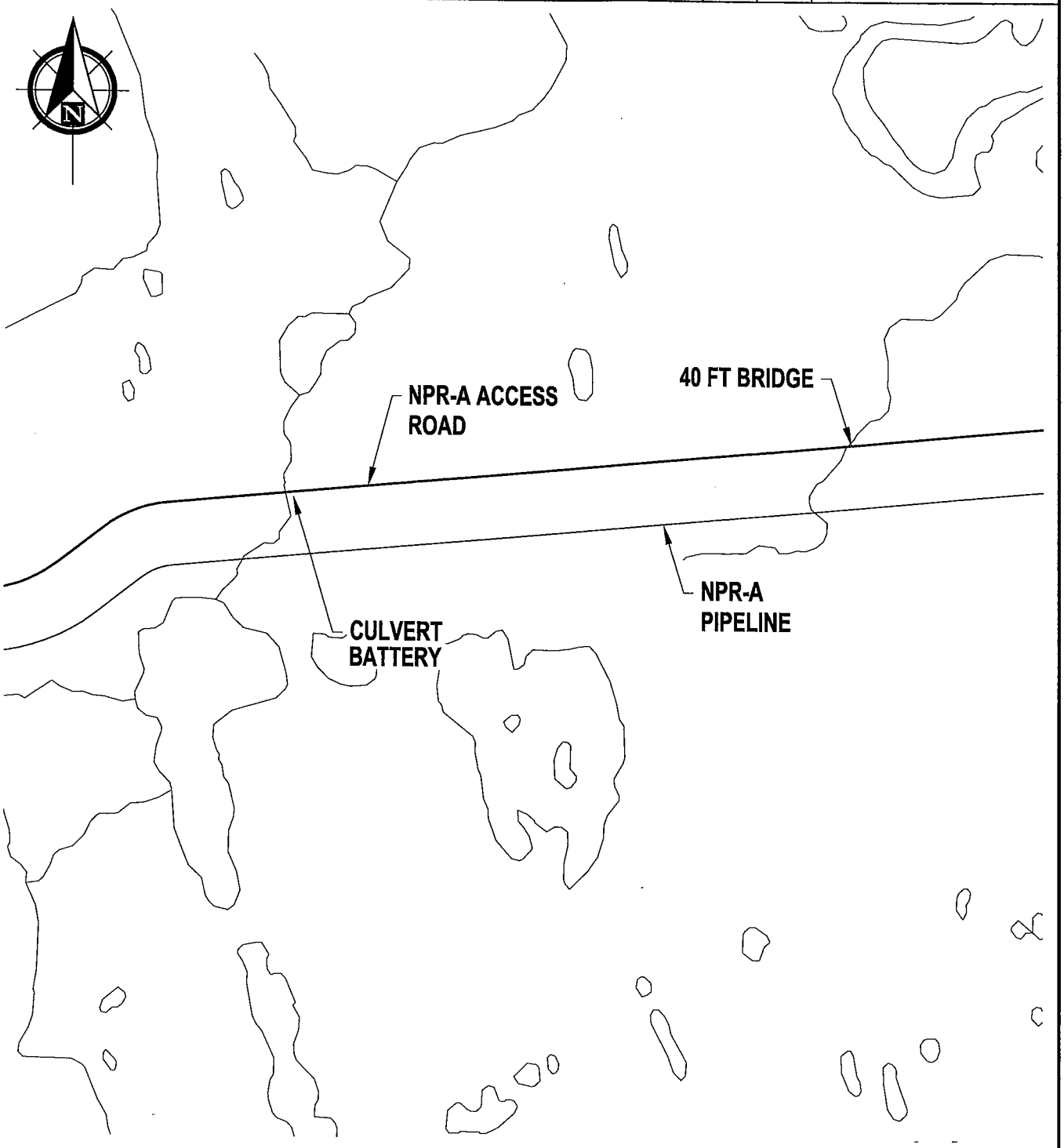

03-19-04

PND Incorporated CONSULTING ENGINEERS

ConocoPhillips Alaska, Inc.

AREA: 00 MODULE: XXXX UNIT: R1

ALPINE SATELLITE DEVELOPMENT PROGRAM
CD-6 ROAD AND PIPELINE ROUTE
SHEET 6

CADD FILE NO.	DRAWING NO: CEA-R1XX-XXXX	SHEET: 037 OF 71	REV: 0

REV	DATE	BY	CK	APP	DESCRIPTION	REV	DATE	BY	CK	APP	DESCRIPTION
0	01/04	RLC	JWP	–	ISSUE FOR PERMIT						

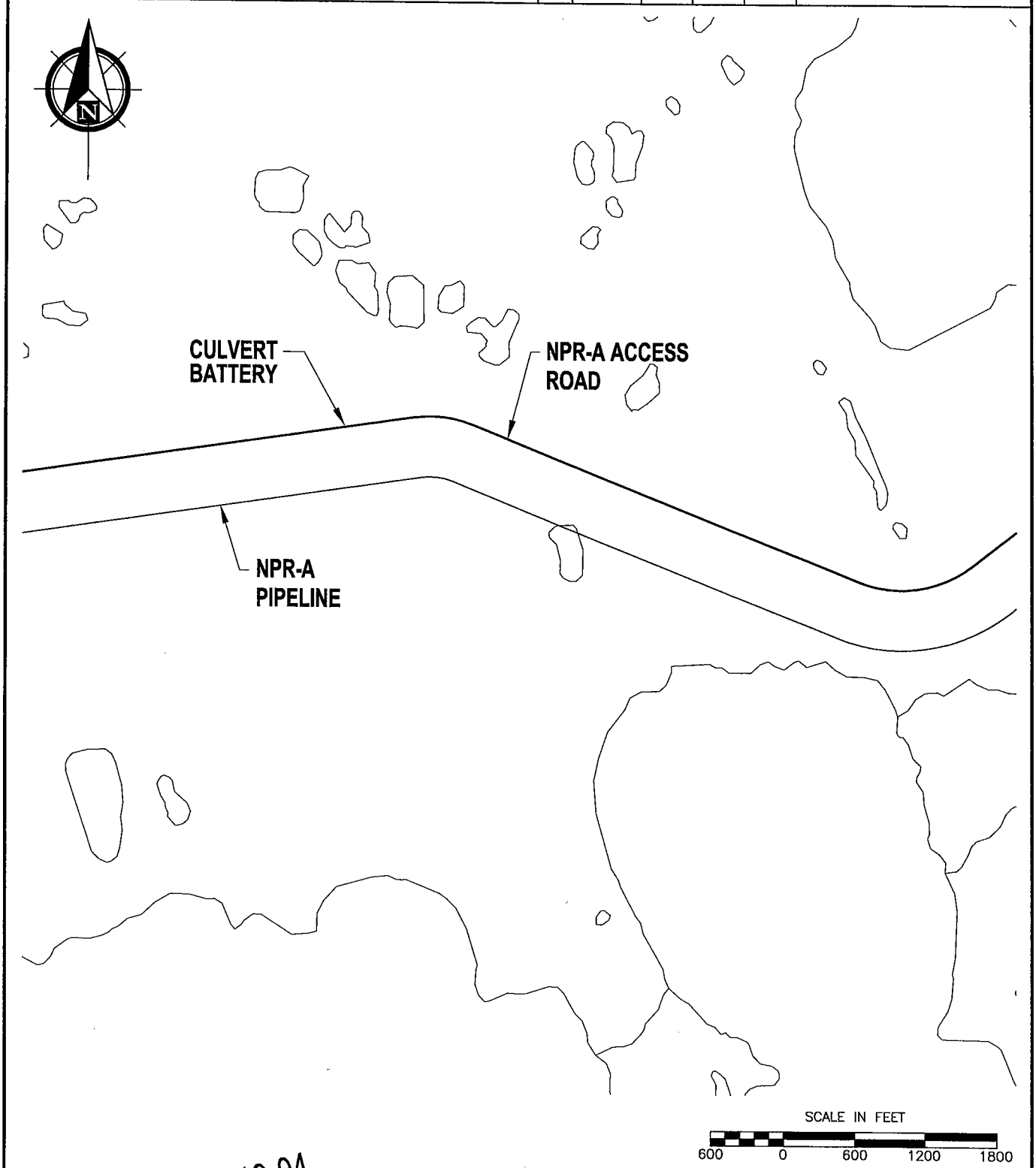

03-19-04

PND Incorporated CONSULTING ENGINEERS

ConocoPhillips Alaska, Inc.

AREA: 00 MODULE: XXXX UNIT: R1

ALPINE SATELLITE DEVELOPMENT PROGRAM
NPRA ACCESS ROAD AND PIPELINE ROUTE
SHEET 7

CADD FILE NO. | DRAWING NO: CEA–R1XX–XXXX | SHEET: 038 OF 71 | REV: 0

REV	DATE	BY	CK	APP	DESCRIPTION	REV	DATE	BY	CK	APP	DESCRIPTION
0	01/04	RLC	JWP	–	ISSUE FOR PERMIT						

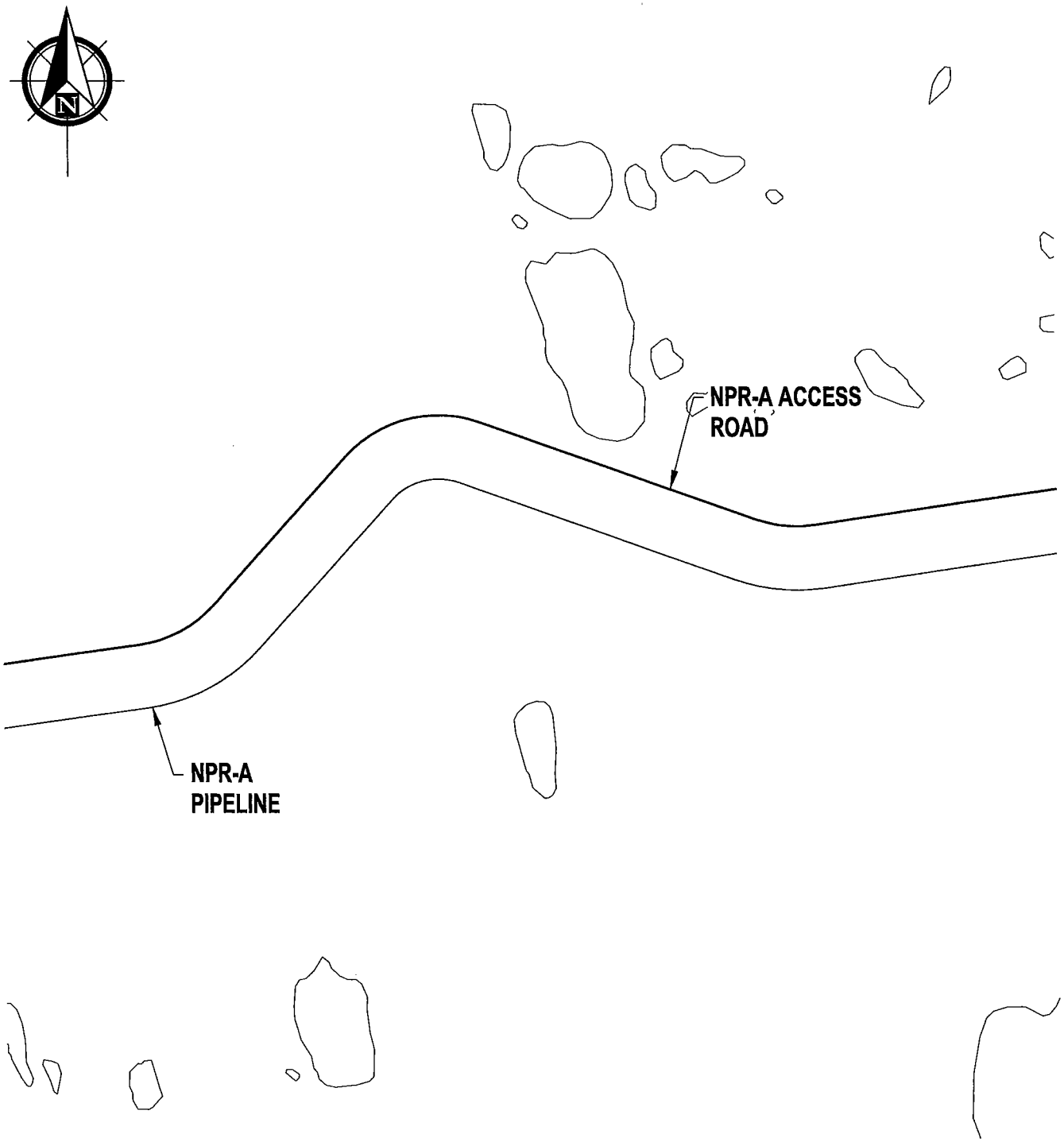

03-19-04

PND Incorporated CONSULTING ENGINEERS

ConocoPhillips Alaska, Inc.

AREA: 00 MODULE: XXXX UNIT: R1

ALPINE SATELLITE DEVELOPMENT PROGRAM
NPRA ACCESS ROAD AND PIPELINE ROUTE
SHEET 8

CADD FILE NO.	DRAWING NO:	SHEET:	REV:
	CEA–R1XX–XXXX	039 OF 71	0

REV	DATE	BY	CK	APP	DESCRIPTION	REV	DATE	BY	CK	APP	DESCRIPTION
0	01/04	RLC	JWP	–	ISSUE FOR PERMIT						

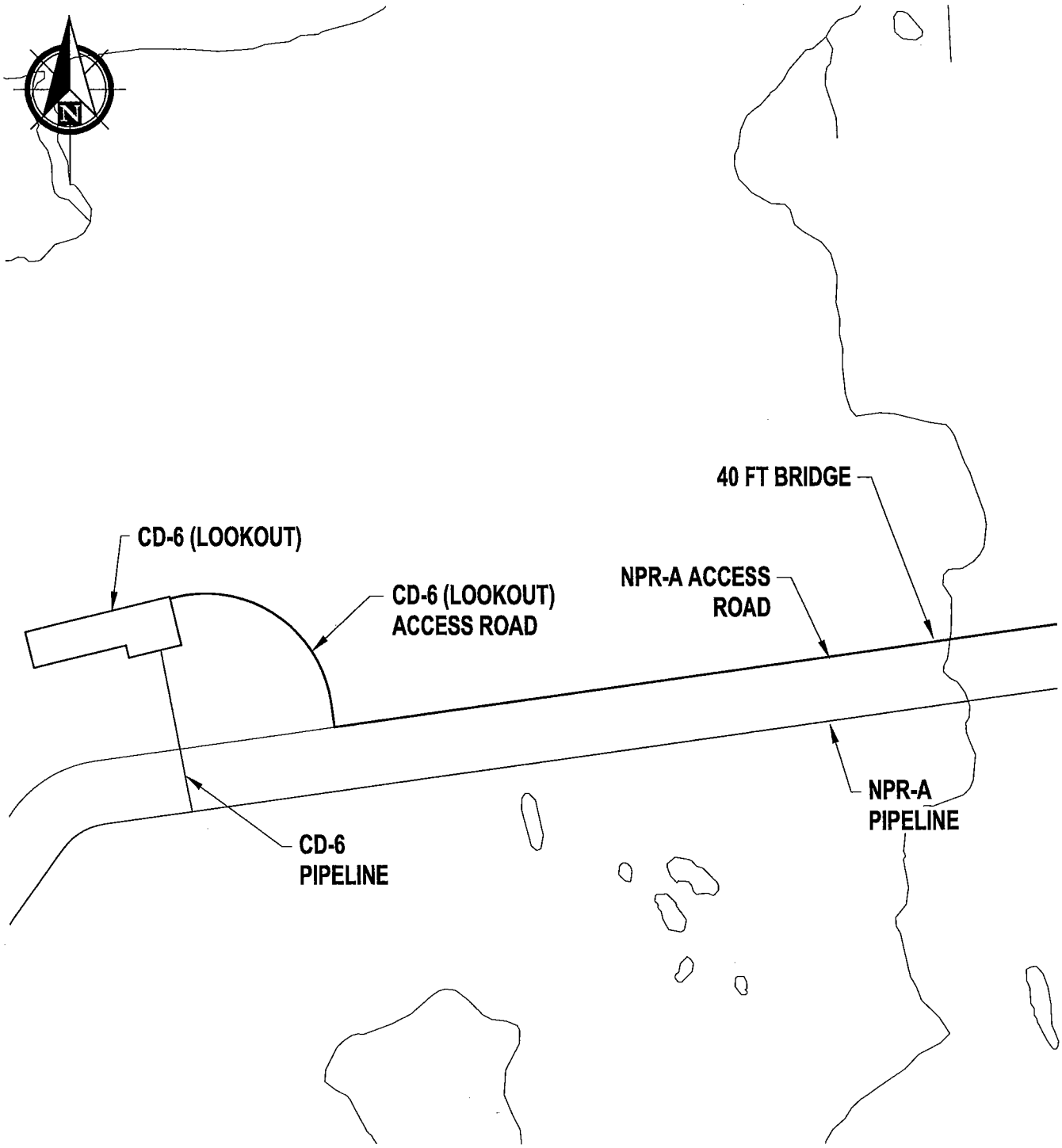

03-19-04

PND Incorporated CONSULTING ENGINEERS

ConocoPhillips Alaska, Inc.

AREA: 00 MODULE: XXXX UNIT: R1

ALPINE SATELLITE DEVELOPMENT PROGRAM
NPRA ACCESS ROAD AND PIPELINE ROUTE
SHEET 9

CADD FILE NO.	DRAWING NO:	SHEET:	REV:
	CEA–R1XX–XXXX	040 OF 71	0

REV	DATE	BY	CK	APP	DESCRIPTION	REV	DATE	BY	CK	APP	DESCRIPTION
0	01/04	RLC	JWP	–	ISSUE FOR PERMIT						

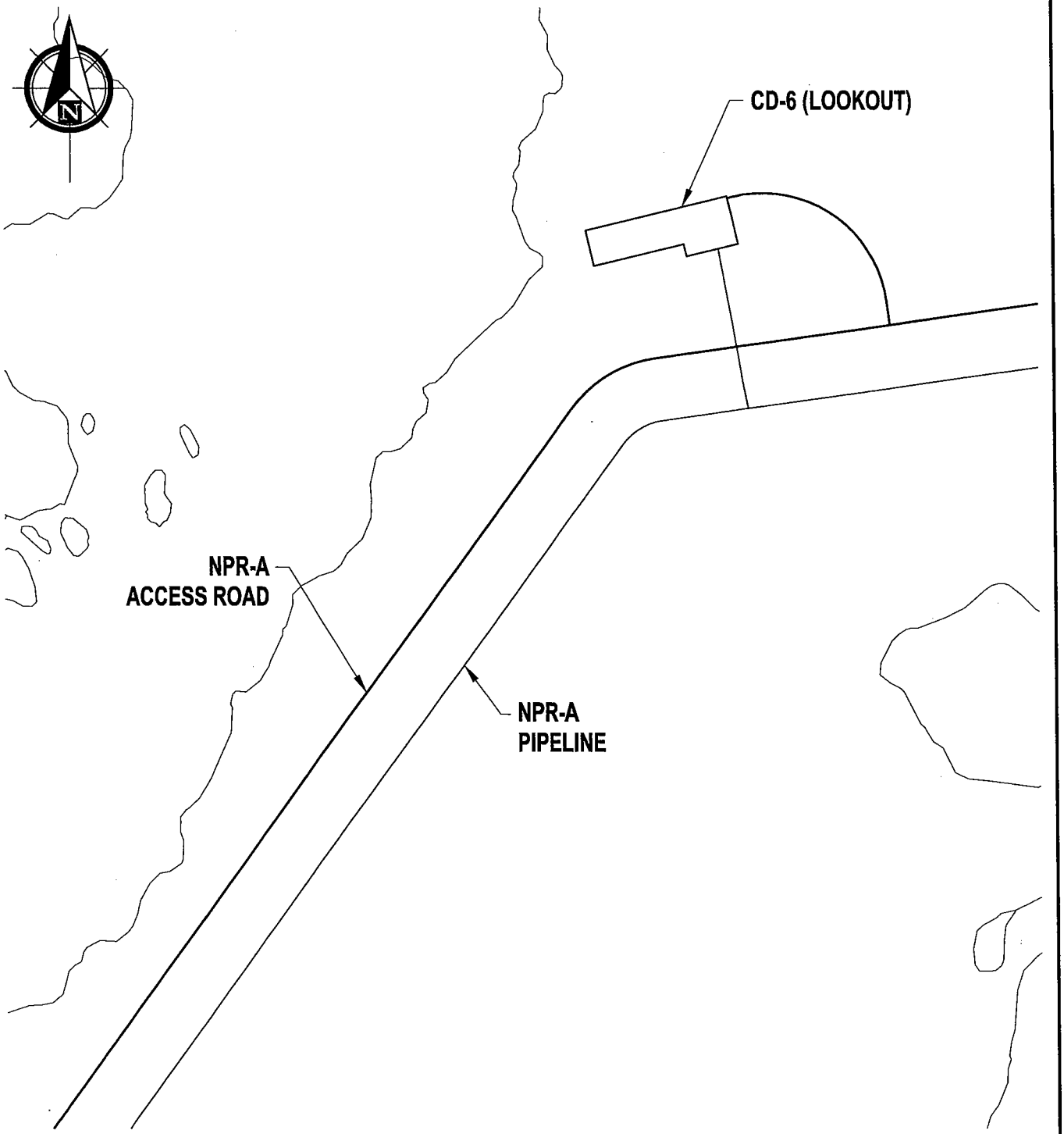

03-19-04

P | N | D Incorporated CONSULTING ENGINEERS

ConocoPhillips Alaska, Inc.

AREA: 00 MODULE: XXXX UNIT: R1

ALPINE SATELLITE DEVELOPMENT PROGRAM
NPRA ACCESS ROAD AND PIPELINE ROUTE
SHEET 10

CADD FILE NO.	DRAWING NO: CFA–R1XX–XXXX	SHEET: 041 OF 71	REV: 0

REV	DATE	BY	CK	APP	DESCRIPTION	REV	DATE	BY	CK	APP	DESCRIPTION
0	01/04	RLC	JWP	–	ISSUE FOR PERMIT						

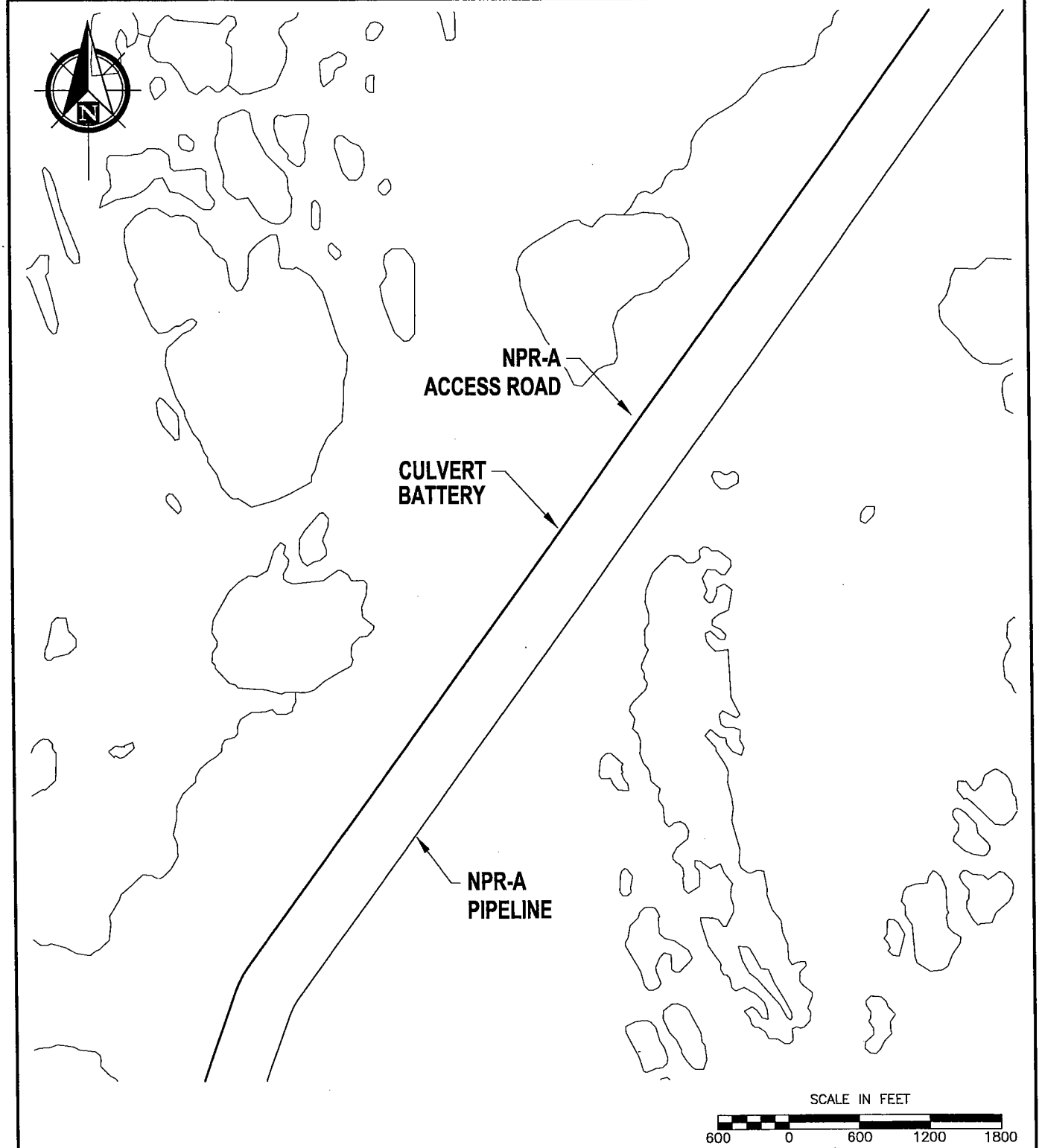

03-19-04

P | N | D Incorporated CONSULTING ENGINEERS

ConocoPhillips Alaska, Inc.

AREA: 00 MODULE: XXXX UNIT: R1

ALPINE SATELLITE DEVELOPMENT PROGRAM
NPRA ACCESS ROAD AND PIPELINE ROUTE
SHEET 11

CADD FILE NO.	DRAWING NO:	SHEET:	REV:
	CFA–R1XX–XXXX	042 OF 71	0

REV	DATE	BY	CK	APP	DESCRIPTION	REV	DATE	BY	CK	APP	DESCRIPTION
0	01/04	RLC	JWP	–	ISSUE FOR PERMIT						

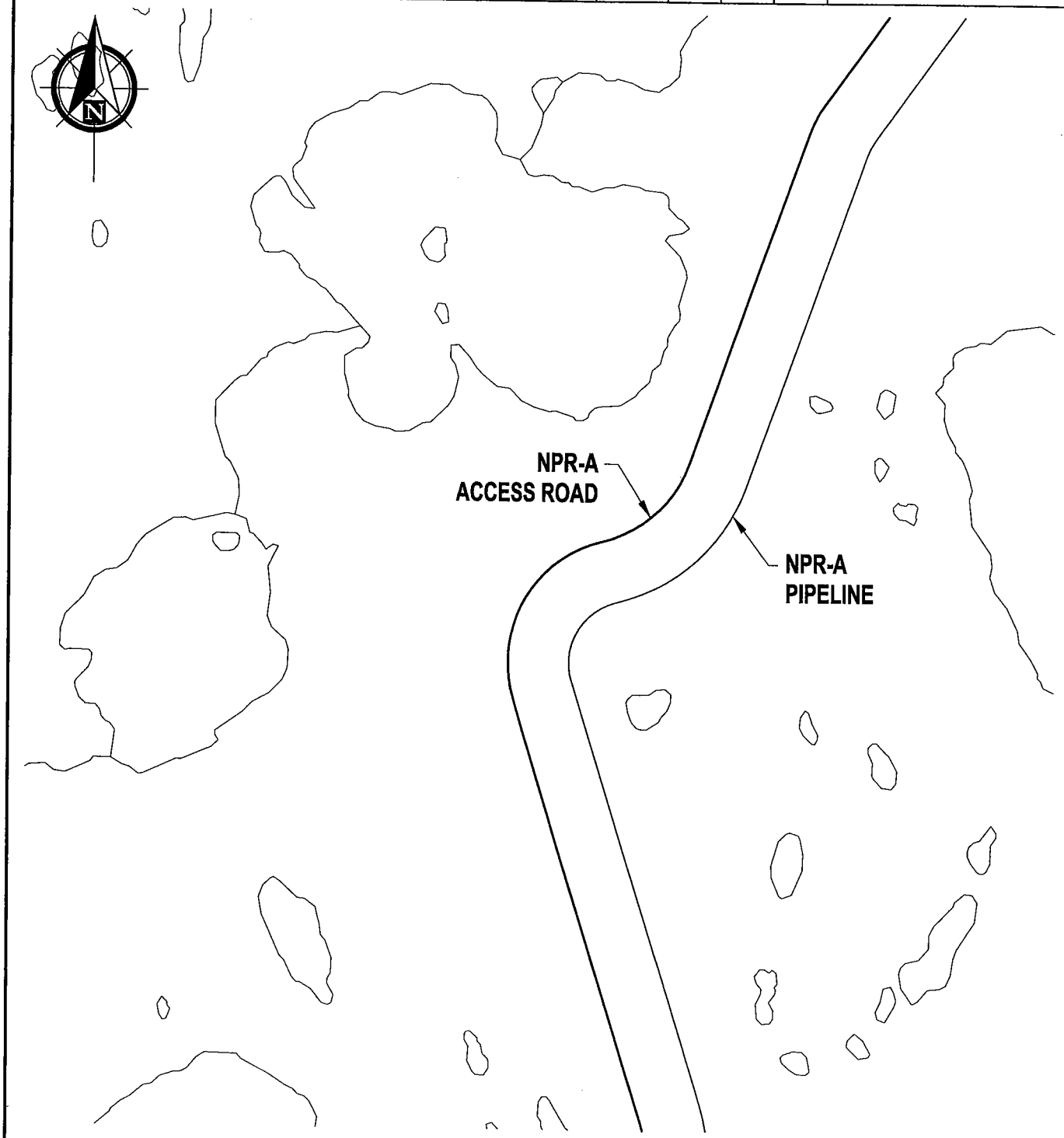

SCALE IN FEET

600 0 600 1200 1800

03-19-04

PND Incorporated CONSULTING ENGINEERS

ConocoPhillips Alaska, Inc.

AREA: 00 MODULE: XXXX UNIT: R1

ALPINE SATELLITE DEVELOPMENT PROGRAM
NPRA ACCESS ROAD AND PIPELINE ROUTE
SHEET 12

CADD FILE NO.

DRAWING NO: CEA–R1XX–XXXX

SHEET: 043 OF 71

REV: 0

REV	DATE	BY	CK	APP	DESCRIPTION	REV	DATE	BY	CK	APP	DESCRIPTION
0	01/04	RLC	JWP	–	ISSUE FOR PERMIT						

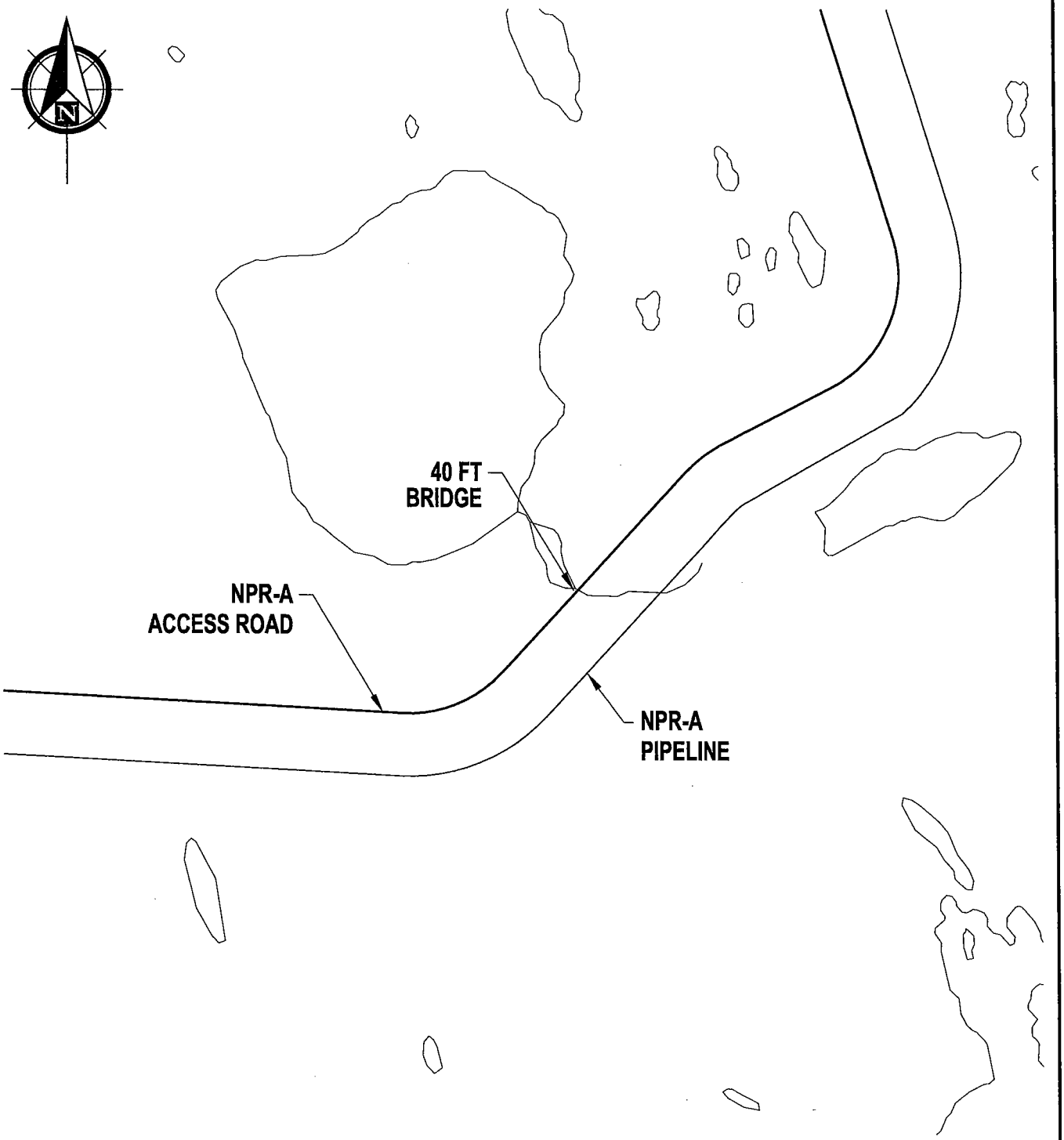

03-19-04

P N D Incorporated CONSULTING ENGINEERS

ConocoPhillips Alaska, Inc.

AREA: 00 MODULE: XXXX UNIT: R1

ALPINE SATELLITE DEVELOPMENT PROGRAM
NPRA ACCESS ROAD AND PIPELINE ROUTE
SHEET 13

CADD FILE NO.	DRAWING NO:	SHEET:	REV:
	CEA–R1XX–XXXX	044 OF 71	0

REV	DATE	BY	CK	APP	DESCRIPTION	REV	DATE	BY	CK	APP	DESCRIPTION
0	01/04	RLC	JWP	–	ISSUE FOR PERMIT						

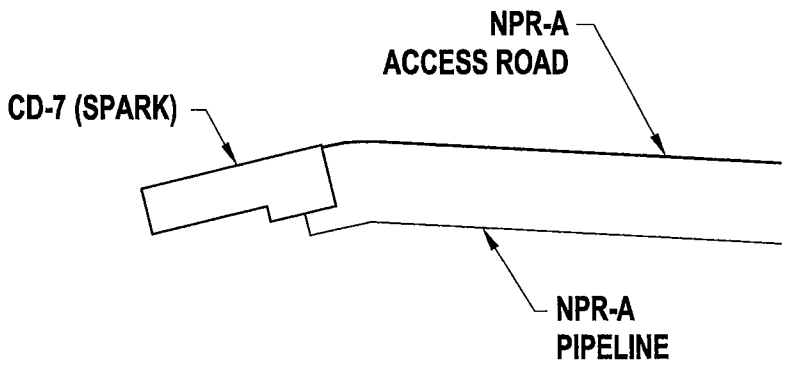

SCALE IN FEET

600 0 600 1200 1800

03-19-04

PND Incorporated CONSULTING ENGINEERS

ConocoPhillips Alaska, Inc.

AREA: 00 MODULE: XXXX UNIT: R1

ALPINE SATELLITE DEVELOPMENT PROGRAM
NPRA ACCESS ROAD AND PIPELINE ROUTE
SHEET 14

CADD FILE NO.	DRAWING NO:	SHEET:	REV:
	CEA–R1XX–XXXX	045 OF 71	0

REV	DATE	BY	CK	APP	DESCRIPTION	REV	DATE	BY	CK	APP	DESCRIPTION
0	01/04	RLC	JWP	–	ISSUE FOR PERMIT						

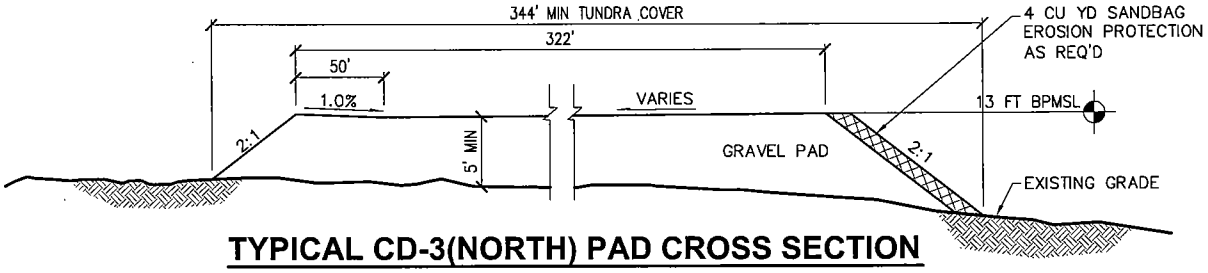

TYPICAL CD-3(NORTH) PAD CROSS SECTION

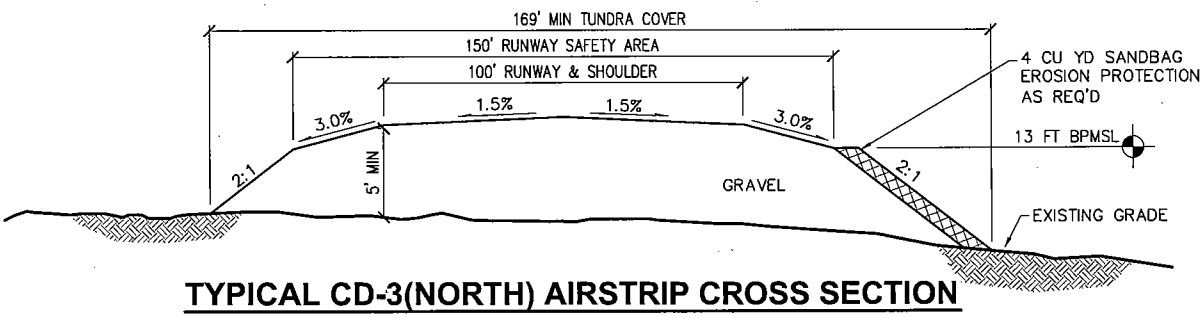

TYPICAL CD-3(NORTH) AIRSTRIP CROSS SECTION

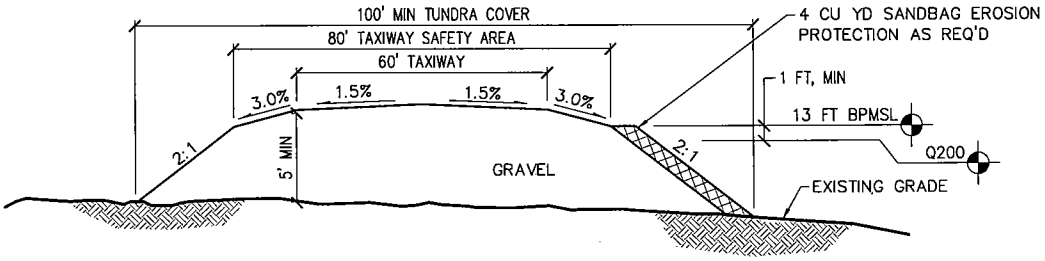

TYPICAL CD-3(NORTH) TAXIWAY CROSS SECTION

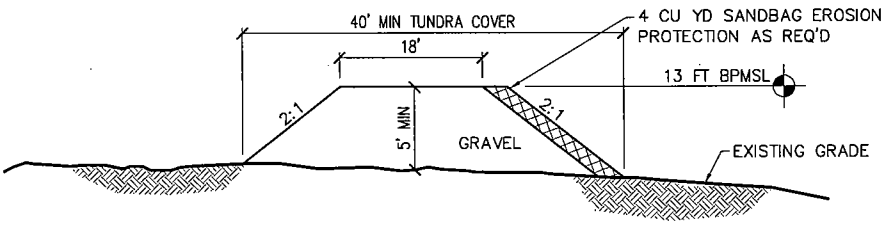

CD-3(NORTH) APRON ACCESS ROAD

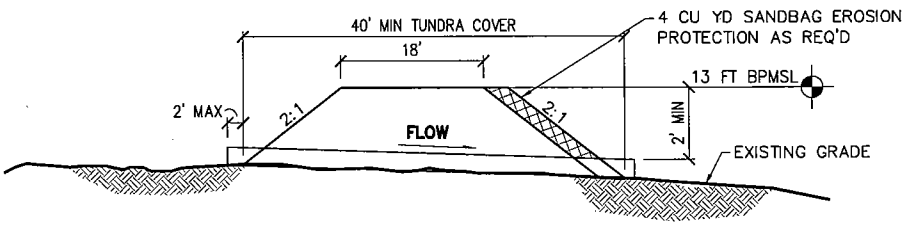

03-19-04

CD-3(NORTH) APRON ACCESS ROAD AT CULVERTS

PND Incorporated CONSULTING ENGINEERS

ConocoPhillips Alaska, Inc.

AREA: 00 MODULE: XXXX UNIT: R1

ALPINE SATELLITE DEVELOPMENT PROGRAM
CD-3(NORTH) TYPICAL SECTIONS

CADD FILE NO.	DRAWING NO: CEA-R1XX-XXXX	SHEET: 046 OF 71	REV: 0

PND CAD File: J:\2001\01117 NPRA Development\Permitting\Drawings\- Dwg Package A\46 - CD-3 Typical Sections.dwg, Mar 31 2004, REV0

REV	DATE	BY	CK	APP	DESCRIPTION	REV	DATE	BY	CK	APP	DESCRIPTION
0	01/04	RLC	JWP	–	ISSUE FOR PERMIT						

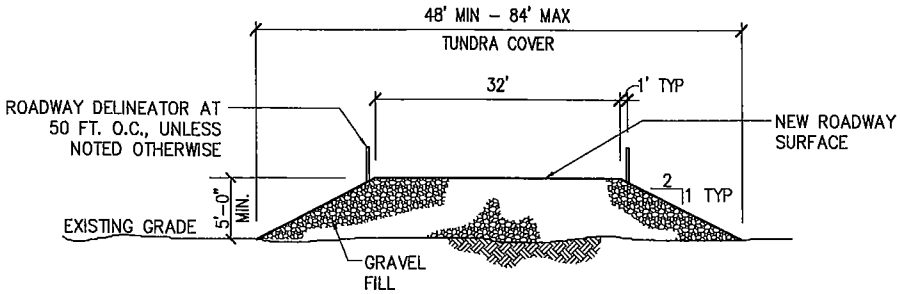

CD-4 (SOUTH) TYPICAL GRAVEL ROADWAY SECTION

NOT TO SCALE

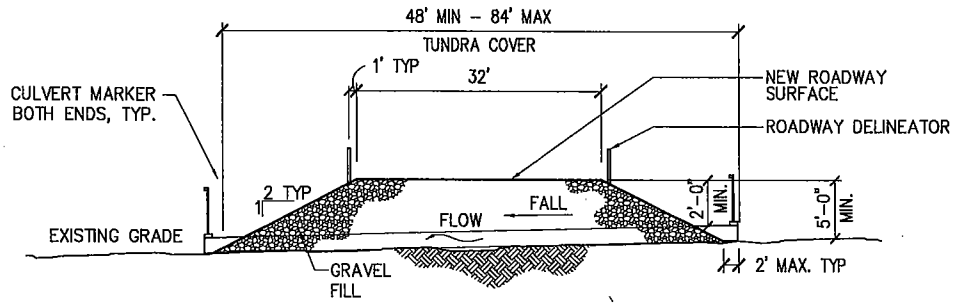

CD-4 (SOUTH) TYPICAL GRAVEL ROADWAY SECTION AT CULVERTS

NOT TO SCALE

03-19-04

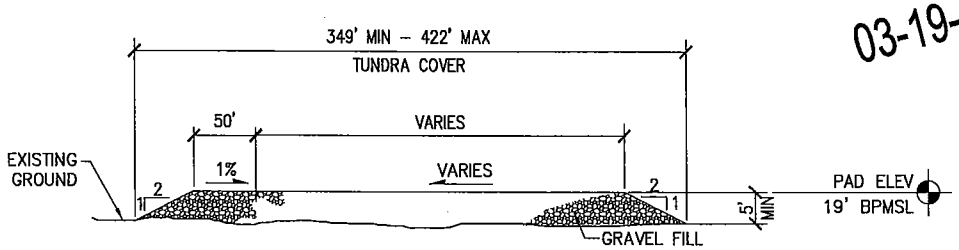

CD-4 (SOUTH) TYPICAL WELL PAD SECTION A-A

NOT TO SCALE

NOTE:
TOE TO TOE DIMENSIONS ARE BASED ON A MINIMUM FILL DEPTH.

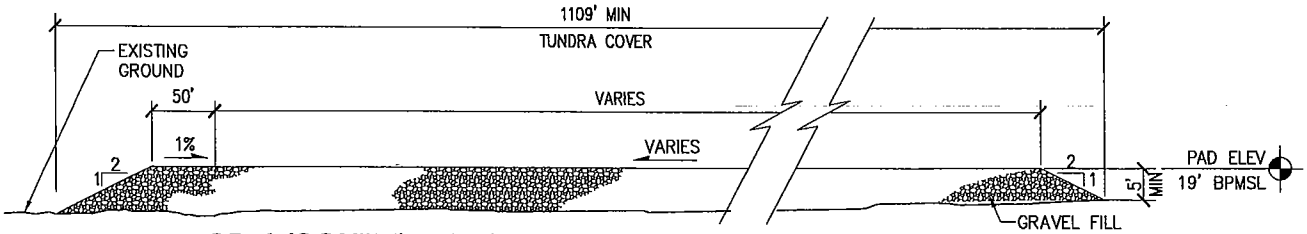

CD-4 (SOUTH) TYPICAL WELL PAD SECTION B-B

NOT TO SCALE

P | N | D Incorporated CONSULTING ENGINEERS

ConocoPhillips Alaska, Inc.

AREA: 00 MODULE: XXXX UNIT: R1

ALPINE SATELLITE DEVELOPMENT PROGRAM
CD-4(SOUTH) TYPICAL SECTIONS

CADD FILE NO.	DRAWING NO: CEA-R1XX-XXXX	SHEET: 047 OF 71	REV: 0

REV	DATE	BY	CK	APP	DESCRIPTION	REV	DATE	BY	CK	APP	DESCRIPTION
0	01/04	RLC	JWP	–	ISSUE FOR PERMIT						

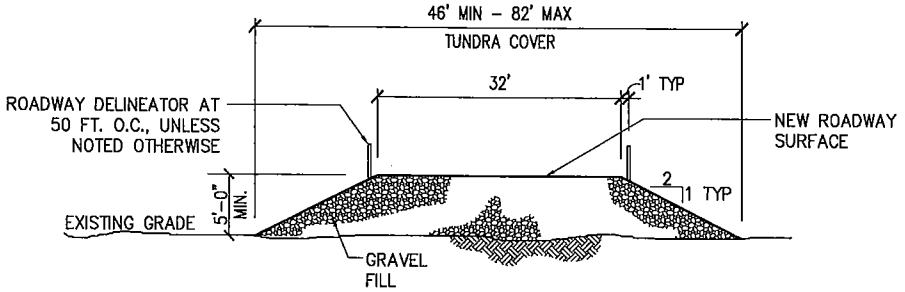

CD-5, CD-6 & CD-7 TYPICAL GRAVEL ROADWAY SECTION

NOT TO SCALE

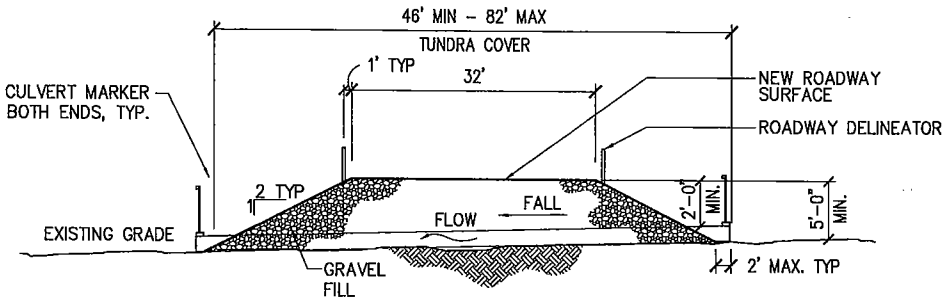

CD-5, CD-6 & CD-7 TYPICAL GRAVEL ROADWAY SECTION AT CULVERTS

NOT TO SCALE

03-19-04

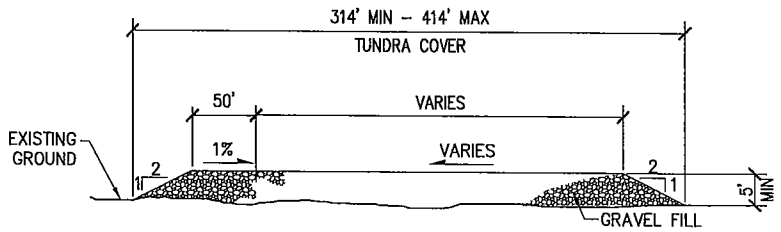

CD-5, CD-6 & CD-7 TYPICAL WELL PAD SECTION A-A

NOT TO SCALE

NOTE:
TOE TO TOE DIMENSIONS ARE BASED ON A MINIMUM FILL DEPTH.

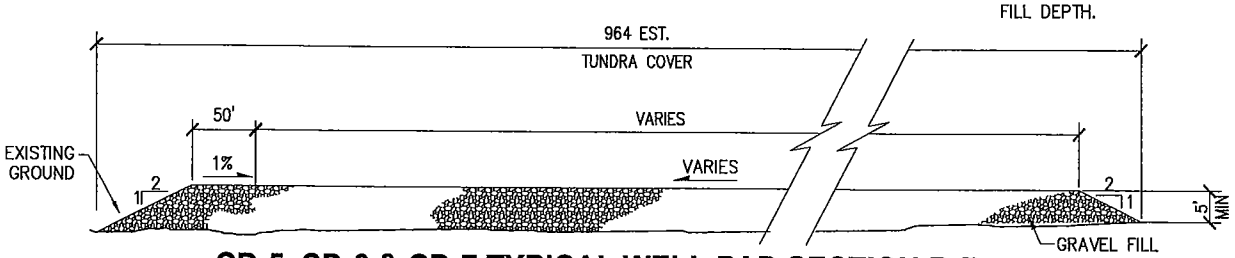

CD-5, CD-6 & CD-7 TYPICAL WELL PAD SECTION B-B

NOT TO SCALE

P | N | D Incorporated CONSULTING ENGINEERS

ConocoPhillips Alaska, Inc.

AREA: 00 MODULE: XXXX UNIT: R1

ALPINE SATELLITE DEVELOPMENT PROGRAM
CD-5 (ALPINE WEST), CD-6 (LOOKOUT)
AND CD-7 (SPARK) TYPICAL SECTIONS

CADD FILE NO.	DRAWING NO:	SHEET:	REV:
	CEA-R1XX-XXXX	048 OF 71	0

REV	DATE	BY	CK	APP	DESCRIPTION	REV	DATE	BY	CK	APP	DESCRIPTION
0	01/04	RLC	JWP	–	ISSUE FOR PERMIT						

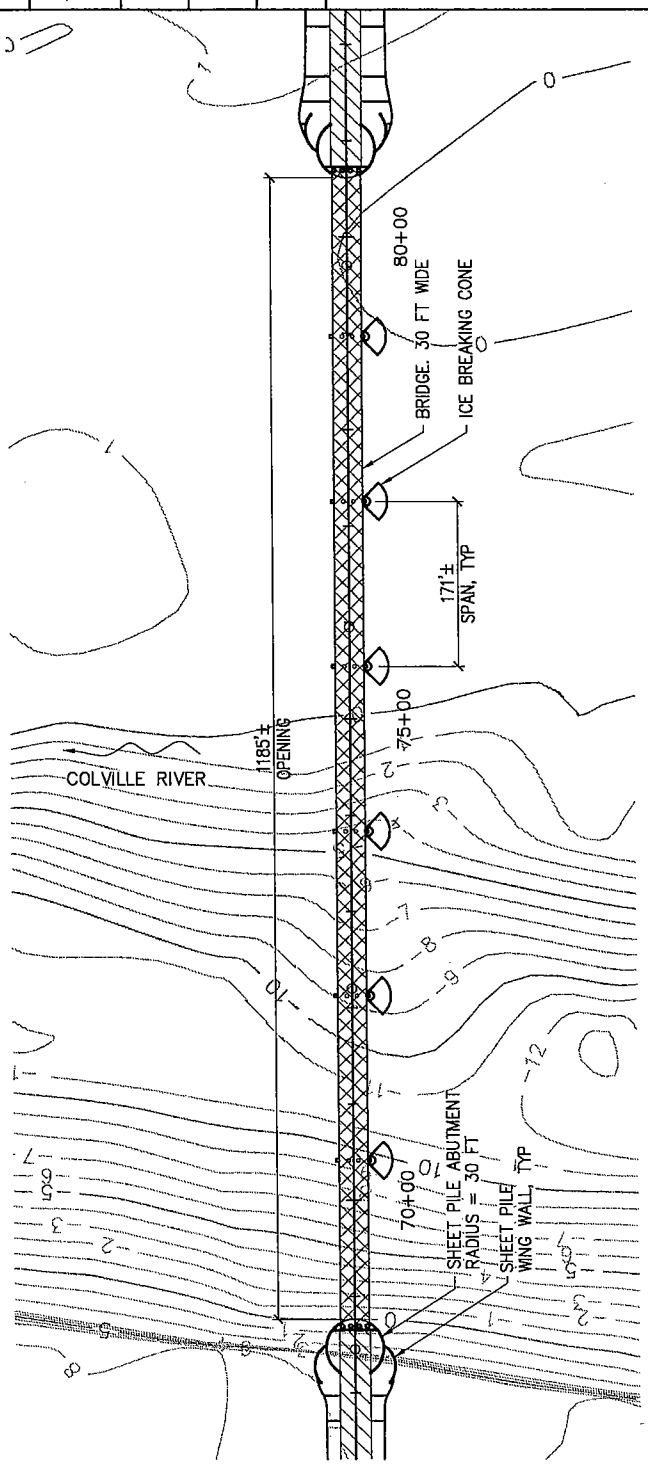

BRIDGE PLAN
NTS

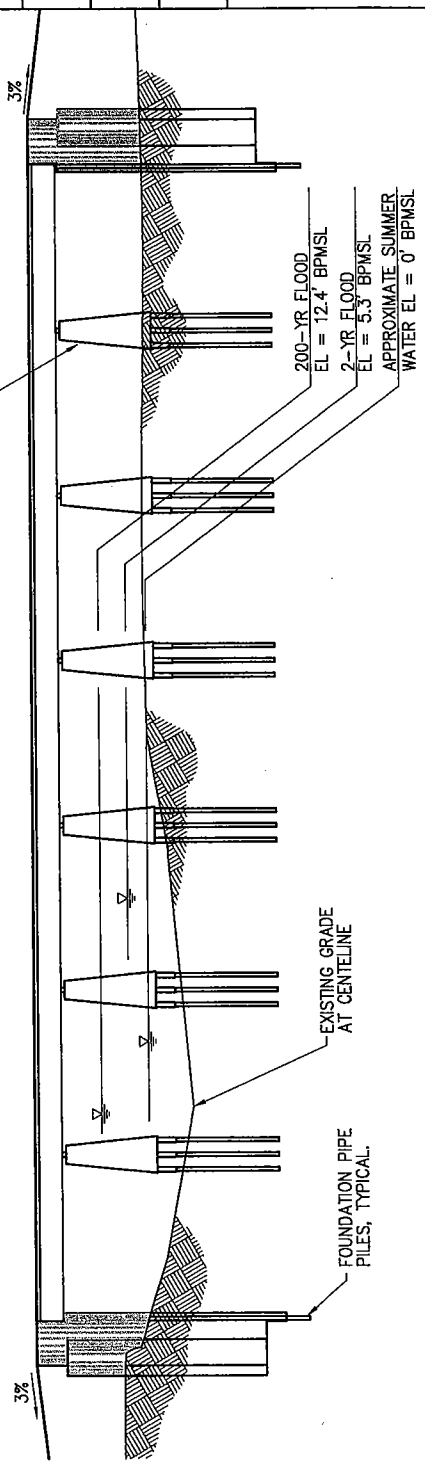

BRIDGE ELEVATION AT CENTERLINE
SCALE 1 HORIZ : 4 VERT

PURPOSE:
PLACE FILL AND STEEL PILE AS PART OF THE CONSTRUCTION OF AN ACCESS ROAD BRIDGE

DATUM:
BRITISH PETROLEUM MEAN SEA LEVEL

ADJACENT PROPERTY OWNERS:
STATE OF ALASKA, KUUKPIK COORPORATION, BLM

03-19-04

P | N | D Incorporated CONSULTING ENGINEERS

ConocoPhillips Alaska, Inc.

AREA: 00 MODULE: XXXX UNIT: R1

ALPINE SATELLITE DEVELOPMENT PROGRAM
1200 FT HEAVY DUTY BRIDGE
PLAN AND ELEVATION

CADD FILE NO.	DRAWING NO: CFA-R1XX-XXXX	SHEET: 049 OF 71	REV: 0

REV	DATE	BY	CK	APP	DESCRIPTION	REV	DATE	BY	CK	APP	DESCRIPTION
0	01/04	RLC	JWP	–	ISSUE FOR PERMIT						

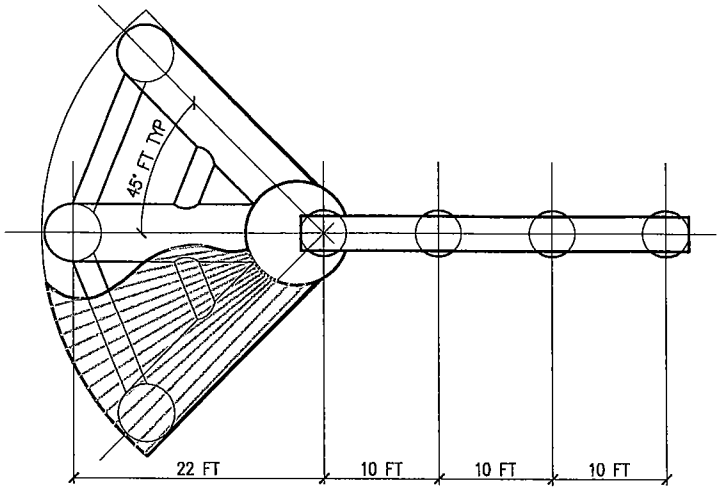

PLAN

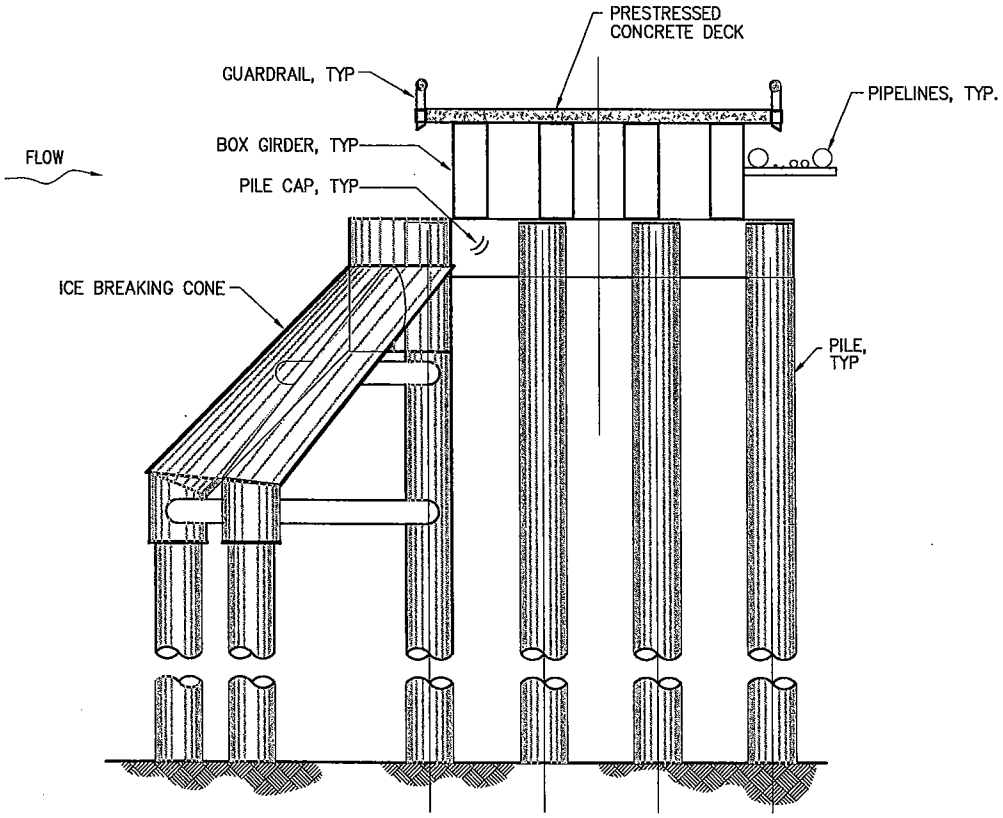

ELEVATION

PURPOSE:
PLACE FILL AND STEEL PILE AS PART OF THE CONSTRUCTION OF AN ACCESS ROAD BRIDGE

DATUM:
BRITISH PETROLEUM MEAN SEA LEVEL

ADJACENT PROPERTY OWNERS:
STATE OF ALASKA, KUUKPIK COORPORATION, BLM

03-19-04

P | N | D Incorporated CONSULTING ENGINEERS

ConocoPhillips Alaska, Inc.

AREA: 00 MODULE: XXXX UNIT: R1

ALPINE SATELLITE DEVELOPMENT PROGRAM
1200 FT HEAVY DUTY BRIDGE
ICE-BREAKING PIER PLAN AND ELEVATION

CADD FILE NO. | DRAWING NO: CFA-R1XX-XXXX | SHEET: 050 OF 71 | REV: 0

REV	DATE	BY	CK	APP	DESCRIPTION	REV	DATE	BY	CK	APP	DESCRIPTION
0	01/04	RLC	JWP	–	ISSUE FOR PERMIT						

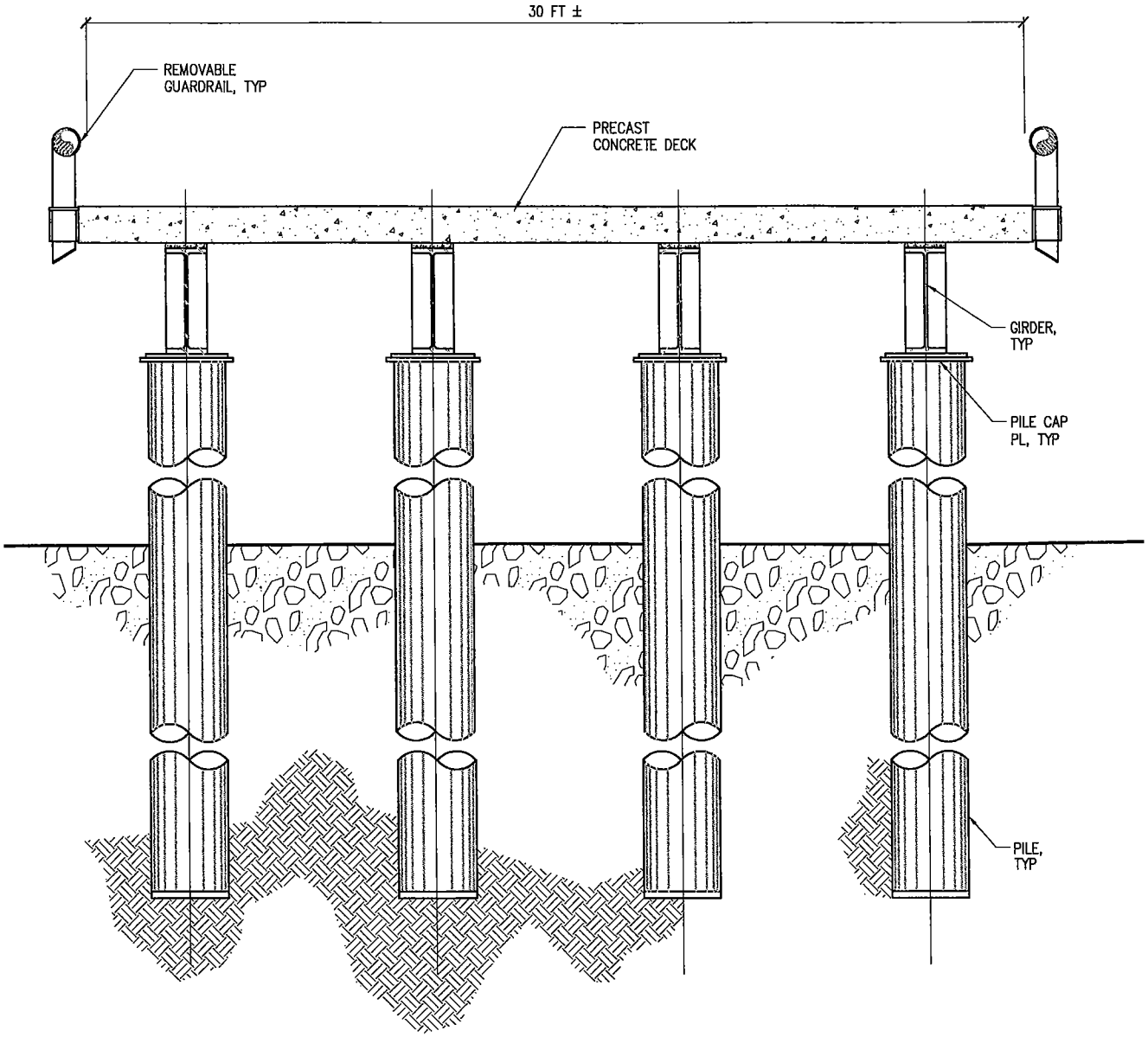

SHORT CROSSING BRIDGE SECTION

NTS

PURPOSE:
PLACE FILL AND STEEL PILE AS PART OF THE CONSTRUCTION OF AN ACCESS ROAD BRIDGE

DATUM:
BRITISH PETROLEUM MEAN SEA LEVEL

ADJACENT PROPERTY OWNERS:
STATE OF ALASKA, KUUKPIK COORPORATION, BLM

03-19-04

P | N | D Incorporated CONSULTING ENGINEERS

ConocoPhillips Alaska, Inc.

AREA: 00 MODULE: XXXX UNIT: R1

ALPINE SATELLITE DEVELOPMENT PROGRAM
TYPICAL SHORT CROSSING
HEAVY DUTY BRIDGE SECTION

CADD FILE NO.	DRAWING NO:	CFA–R1XX–XXXX	SHEET: 051 OF 71	REV: 0

REV	DATE	BY	CK	APP	DESCRIPTION	REV	DATE	BY	CK	APP	DESCRIPTION
0	01/04	RLC	JWP	–	ISSUE FOR PERMIT						

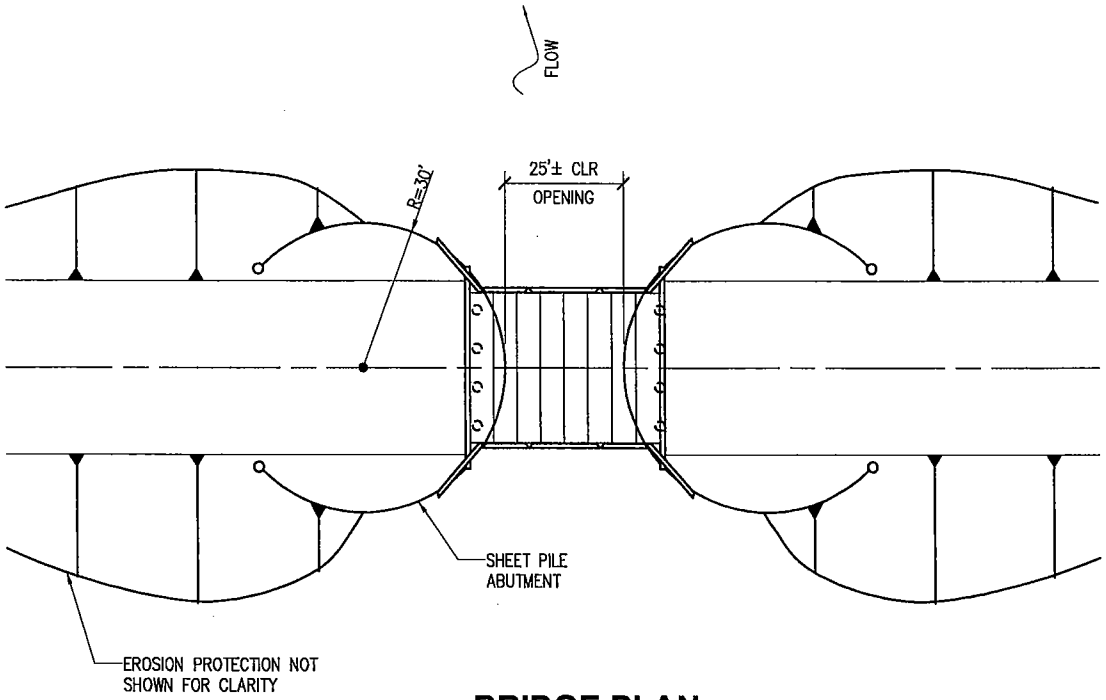

BRIDGE PLAN

NTS

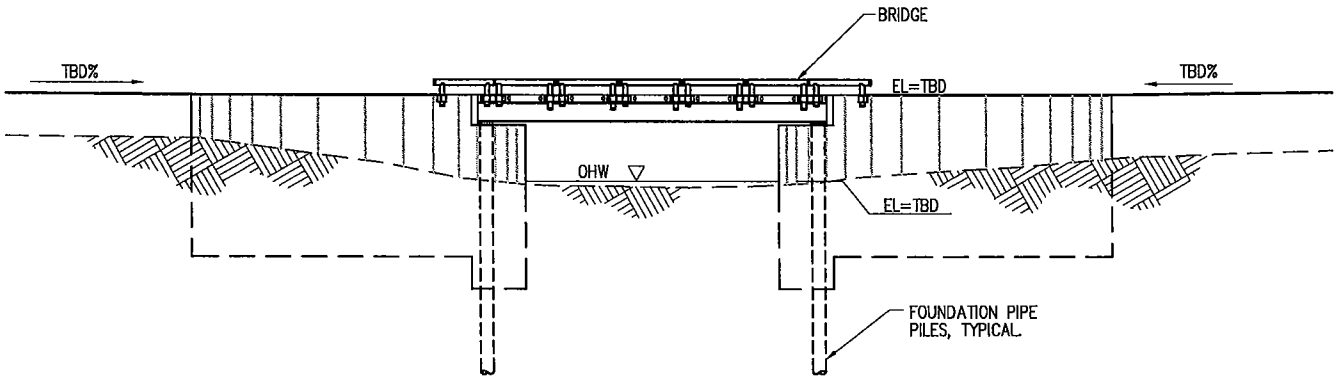

BRIDGE ELEVATION AT CENTERLINE

NTS

HYDROLOGIC DATA

APPROX. ORDINARY HIGH WATER (OHW) ELEVATION = TBD
2 YR PEAK DISCHARGE = TBD

QUANTITIES SUMMARY

NFS GRAVEL BELOW OHW TBD CY
FILL AREA BELOW OHW

PURPOSE:
PLACE FILL AND STEEL PILE AS PART OF THE CONSTRUCTION OF AN ACCESS ROAD BRIDGE

DATUM:
BRITISH PETROLEUM MEAN SEA LEVEL

ADJACENT PROPERTY OWNERS:
STATE OF ALASKA, KUUKPIK COORPORATION, BLM

03-19-04

P | N | D Incorporated CONSULTING ENGINEERS

ConocoPhillips Alaska, Inc.

AREA: 00 MODULE: XXXX UNIT: R1

ALPINE SATELLITE DEVELOPMENT PROGRAM
40 FT HEAVY DUTY BRIDGE
PLAN AND ELEVATION

CADD FILE NO.	DRAWING NO: CFA–R1XX–XXXX	SHEET: 052 OF 71	REV: 0

REV	DATE	BY	CK	APP	DESCRIPTION	REV	DATE	BY	CK	APP	DESCRIPTION
0	01/04	RLC	JWP	–	ISSUE FOR PERMIT						

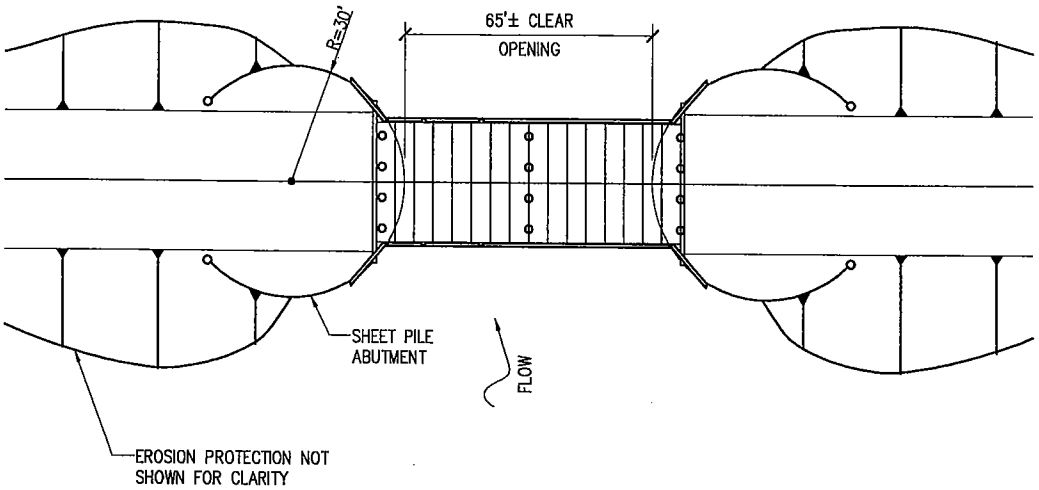

BRIDGE PLAN

NTS

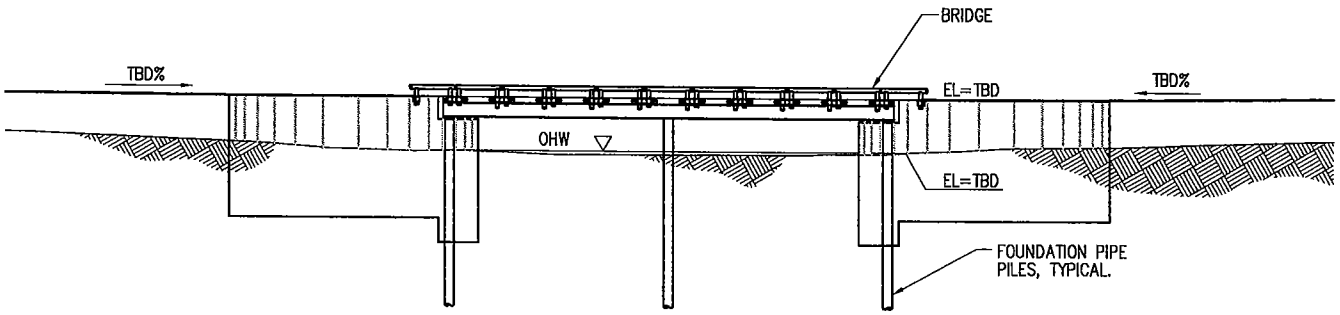

BRIDGE ELEVATION AT CENTERLINE

NTS

HYDROLOGIC DATA

APPROX. ORDINARY HIGH WATER (OHW) ELEVATION = TBD
2 YR PEAK DISCHARGE = TBD

QUANTITIES SUMMARY

NFS GRAVEL BELOW OHW	TBD CY
FILL AREA BELOW OHW	TBD ACRE

03-19-04

PURPOSE:
PLACE FILL AND STEEL PILE AS PART OF THE CONSTRUCTION OF AN ACCESS ROAD BRIDGE

DATUM:
BRITISH PETROLEUM MEAN SEA LEVEL

ADJACENT PROPERTY OWNERS:
STATE OF ALASKA, KUUKPIK COORPORATION, BLM

P | N | D Incorporated CONSULTING ENGINEERS

ConocoPhillips Alaska, Inc.

AREA: 00 MODULE: XXXX UNIT: R1

ALPINE SATELLITE DEVELOPMENT PROGRAM
80 FT HEAVY DUTY BRIDGE
PLAN AND ELEVATION

CADD FILE NO.	DRAWING NO:	SHEET:	REV:
	CEA–R1XX–XXXX	053 OF 71	0

REV	DATE	BY	CK	APP	DESCRIPTION	REV	DATE	BY	CK	APP	DESCRIPTION
0	01/04	RLC	JWP	–	ISSUE FOR PERMIT						

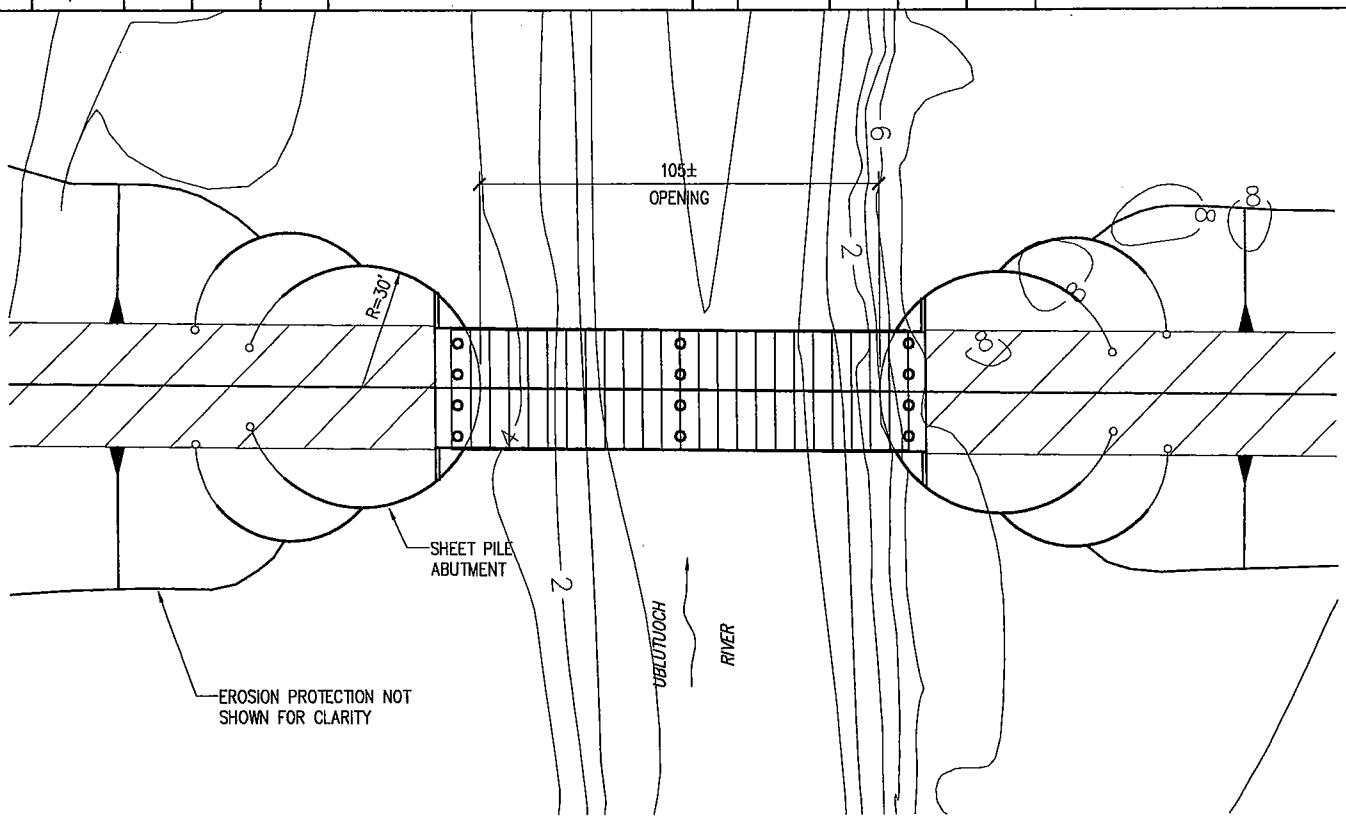

BRIDGE PLAN

NTS

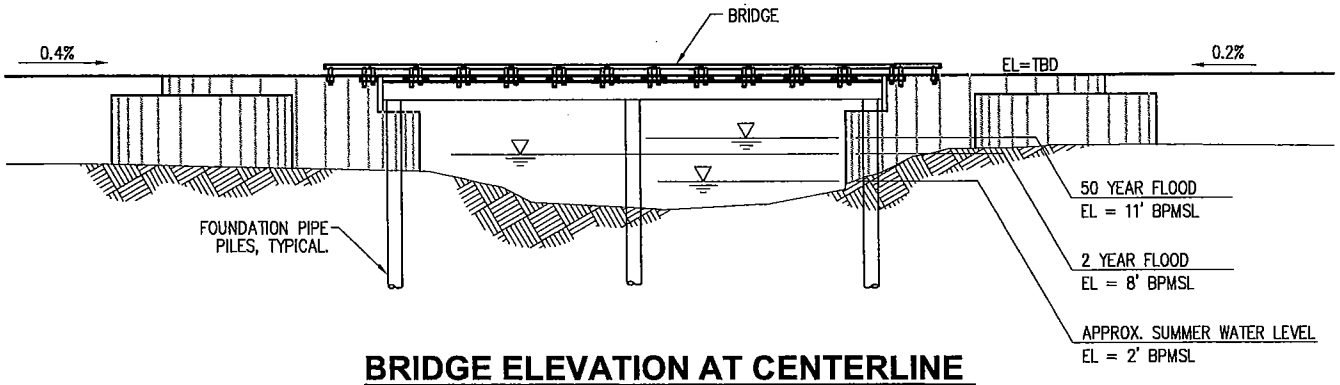

BRIDGE ELEVATION AT CENTERLINE

NTS

HYDROLOGIC DATA

APPROX. ORDINARY HIGH WATER (OHW) ELEVATION = TBD
2 YR PEAK DISCHARGE = TBD

QUANTITIES SUMMARY

NFS GRAVEL BELOW OHW	TBD CY
FILL AREA BELOW OHW	TBD ACRE

PURPOSE:
PLACE FILL AND STEEL PILE AS PART OF THE CONSTRUCTION OF AN ACCESS ROAD BRIDGE

DATUM:
BRITISH PETROLEUM MEAN SEA LEVEL

ADJACENT PROPERTY OWNERS:
STATE OF ALASKA, KUUKPIK COORPORATION, BLM

03-19-04

P | N | D Incorporated CONSULTING ENGINEERS

ConocoPhillips Alaska, Inc.

AREA: 00 MODULE: XXXX UNIT: R1

ALPINE SATELLITE DEVELOPMENT PROGRAM
120 FT HEAVY DUTY BRIDGE
PLAN AND ELEVATION

CADD FILE NO.	DRAWING NO: CFA–R1XX–XXXX	SHEET: 054 OF 71	REV: 0

REV	DATE	BY	CK	APP	DESCRIPTION	REV	DATE	BY	CK	APP	DESCRIPTION
0	01/04	RLC	JWP	–	ISSUE FOR PERMIT						

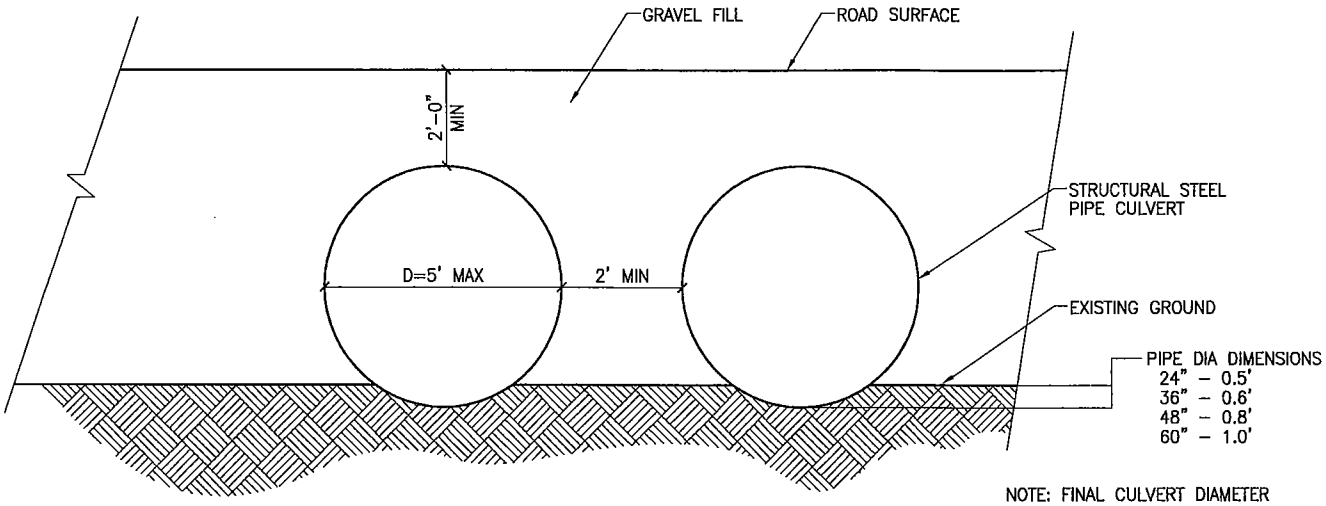

NOTE: FINAL CULVERT DIAMETER "D" AND NUMBER OF CULVERTS REQUIRED FOR EACH STREAM CROSSING WILL BE DETERMINED DURING FINAL DESIGN.

CULVERT BATTERY FISH PASSAGE ELEVATION

NOTE: TYPE AND EXTENT OF ARMOR AND/OR SCOUR PROTECTION, IF ANY, FOR EACH CROSSING WILL BE DETERMINED DURING FINAL DESIGN.

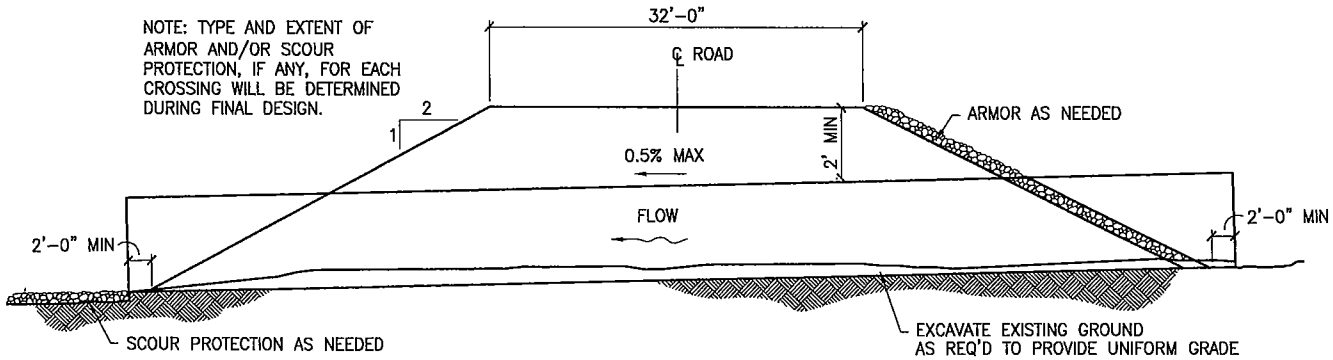

FISH PASSAGE SECTION

03-19-04

CULVERT BATTERY	Q_{50}	PIPE CULVERTS
1	< 200 CFS	2 – 48"ø
2	230 CFS	3 – 48"ø
3	< 200 CFS	2 – 48"ø
4	< 100 CFS	1 – 48"ø

PURPOSE:
PLACE FILL AND CULVERT AS PART OF THE ROAD CONSTRUCTION

DATUM:
BRITISH PETROLEUM MEAN SEA LEVEL

ADJACENT PROPERTY OWNERS:
STATE OF ALASKA, KUUKPIK COORPORATION, BLM

P N D Incorporated CONSULTING ENGINEERS

ConocoPhillips Alaska, Inc.

AREA: 00 MODULE: XXXX UNIT: R1

ALPINE SATELLITE DEVELOPMENT PROGRAM
TYPICAL FISH PASSAGE CULVERT
CROSS SECTIONS

CADD FILE NO.	DRAWING NO:	SHEET:	REV:
	CEA-R1XX-XXXX	055 OF 71	0

REV	DATE	BY	CK	APP	DESCRIPTION	REV	DATE	BY	CK	APP	DESCRIPTION
0	01/04	RLC	JWP	–	ISSUE FOR PERMIT						

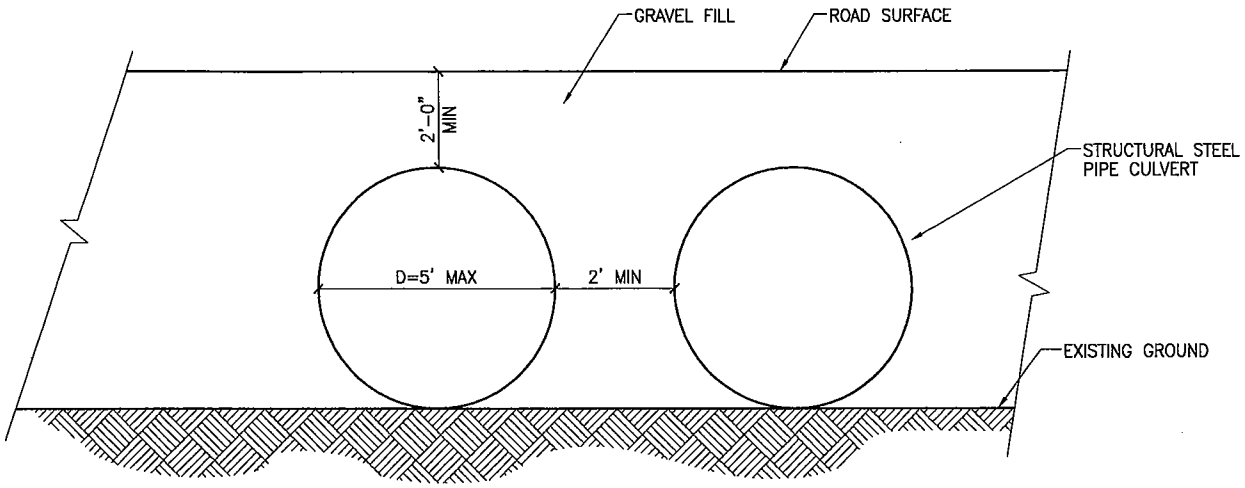

NOTE: FINAL CULVERT DIAMETER "D" AND NUMBER OF CULVERTS REQUIRED FOR EACH DRAINAGE CROSSING WILL BE DETERMINED DURING FINAL DESIGN.

CULVERT BATTERY
NON-FISH PASSAGE INLET ELEVATION

NOTE: TYPE AND EXTENT OF ARMOR AND/OR SCOUR PROTECTION, IF ANY, FOR EACH CROSSING WILL BE DETERMINED DURING FINAL DESIGN.

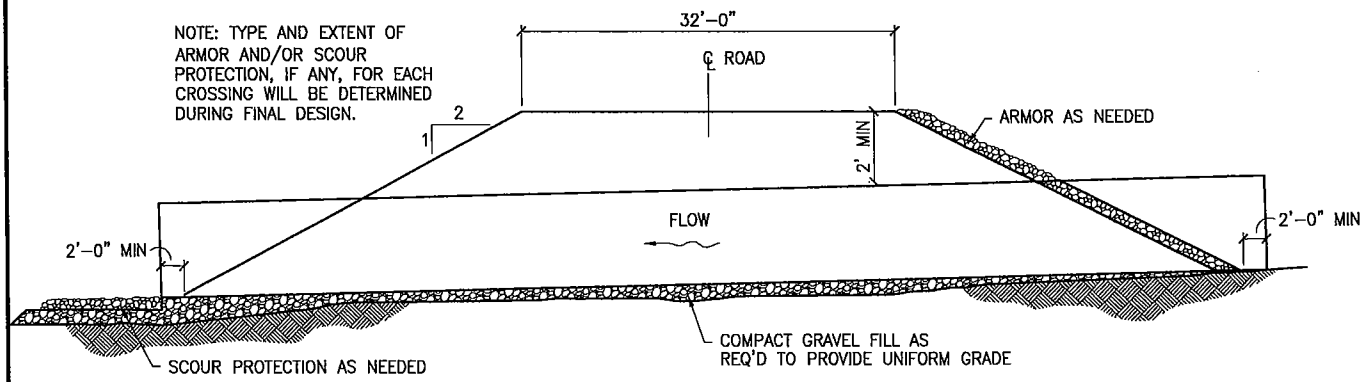

NON-FISH PASSAGE SECTION

PURPOSE:
PLACE FILL AND CULVERT AS PART OF THE ROAD CONSTRUCTION

DATUM:
BRITISH PETROLEUM MEAN SEA LEVEL

ADJACENT PROPERTY OWNERS:
STATE OF ALASKA, KUUKPIK COORPORATION, BLM

03-19-04

PND Incorporated CONSULTING ENGINEERS

ConocoPhillips Alaska, Inc.

AREA: 00 MODULE: XXXX UNIT: R1

ALPINE SATELLITE DEVELOPMENT PROGRAM
TYPICAL NON-FISH PASSAGE CULVERT
CROSS SECTIONS

CADD FILE NO.	DRAWING NO: CFA-R1XX-XXXX	SHEET: 056 OF 71	REV: 0

REV	DATE	BY	CK	APP	DESCRIPTION	REV	DATE	BY	CK	APP	DESCRIPTION
0	01/04	RLC	JWP	–	ISSUE FOR PERMIT						

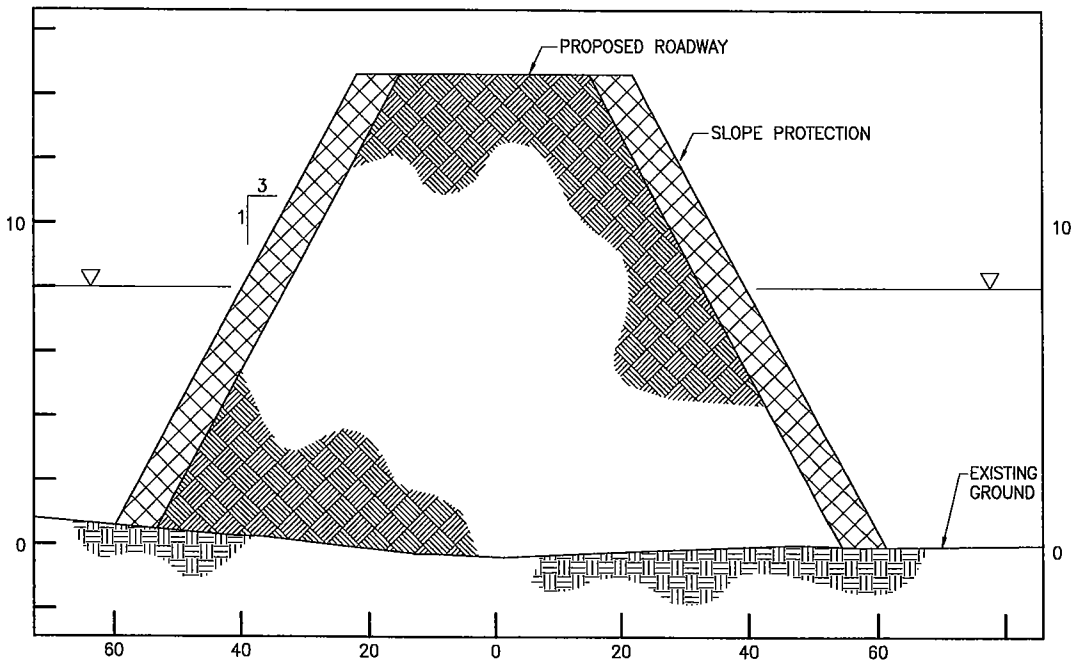

TYPICAL ROADWAY SECTION AT LAKE

(STA 176+50± TO STA 181+50±)

03-19-04

P | N | D Incorporated CONSULTING ENGINEERS

ConocoPhillips Alaska, Inc.

AREA: 00 MODULE: XXXX UNIT: R1

ALPINE SATELLITE DEVELOPMENT PROGRAM
CD-4 (SOUTH) LAKE PASSAGE
ROADWAY SECTION

CADD FILE NO. | DRAWING NO: CEA-R1XX-XXXX | SHEET: 057 OF 71 | REV: 0

REV	DATE	BY	CK	APP	DESCRIPTION	REV	DATE	BY	CK	APP	DESCRIPTION
0	01/04	RLC	JWP	–	ISSUE FOR PERMIT						

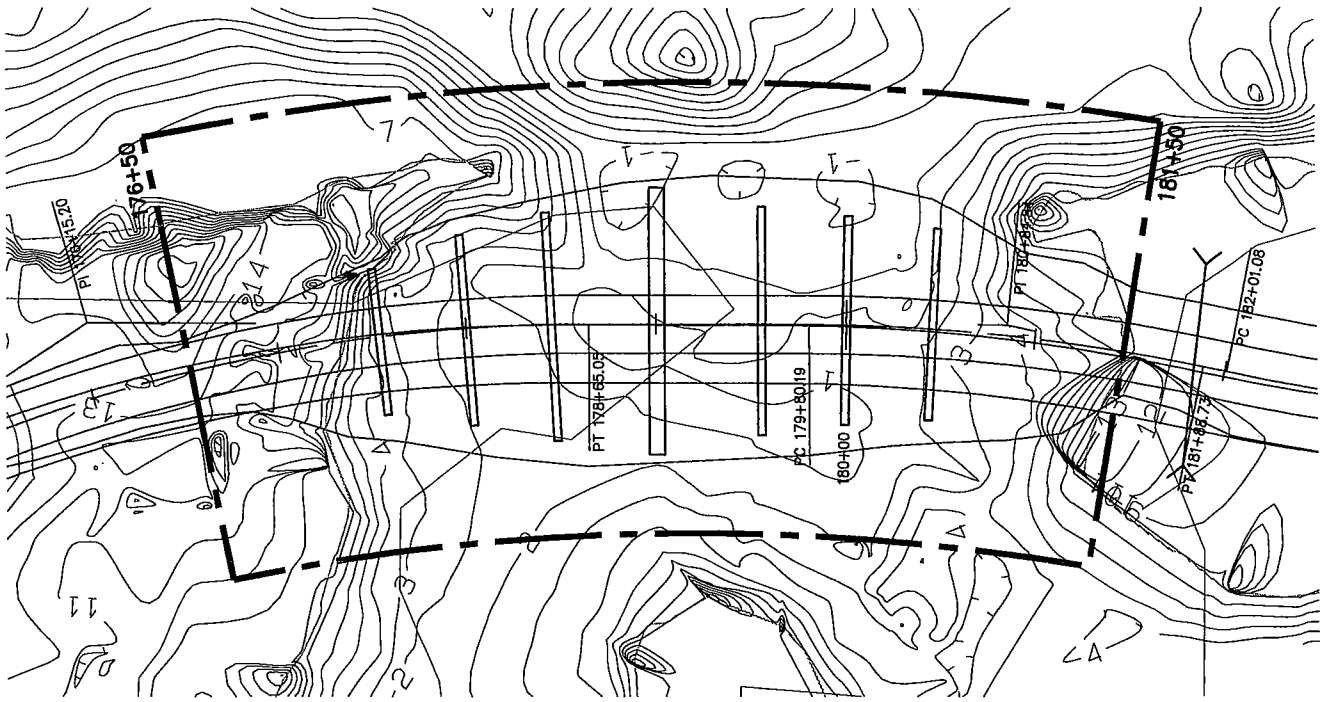

PLAN

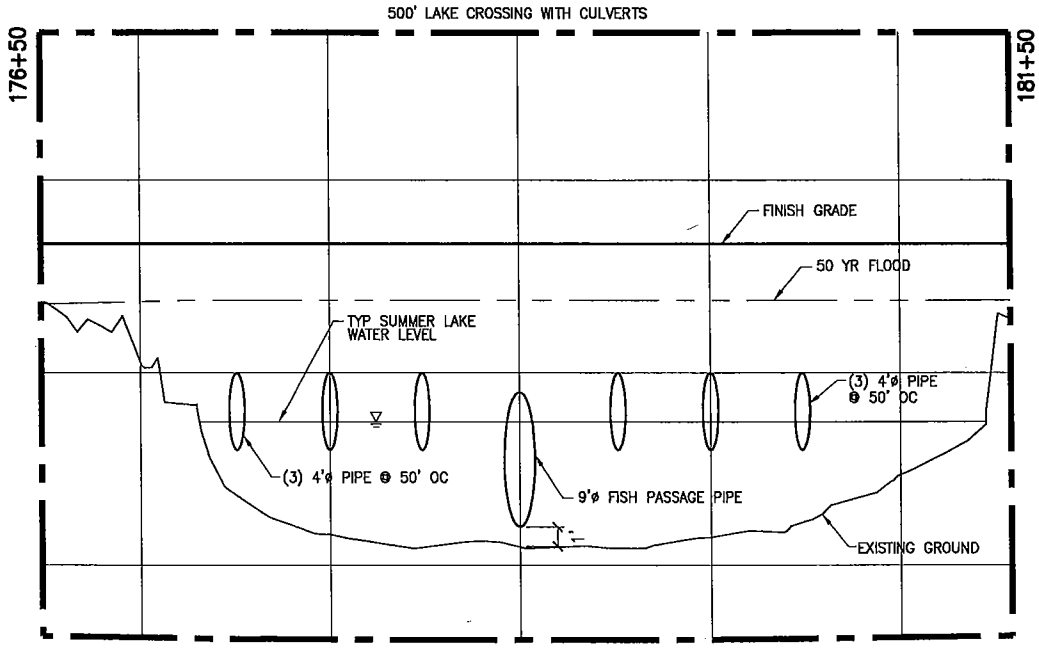

PROFILE

PURPOSE:
PLACE FILL AND CULVERTS AS PART OF THE CD 4 ACCESS ROAD CONSTRUCTION

DATUM:
BRITISH PETROLEUM MEAN SEA LEVEL

ADJACENT PROPERTY OWNERS:
STATE OF ALASKA, KUUKPIK COORPORATION, BLM

03-19-04

P | N | D Incorporated CONSULTING ENGINEERS

ConocoPhillips Alaska, Inc.

AREA: 00 MODULE: XXXX UNIT: R1

ALPINE SATELLITE DEVELOPMENT PROGRAM
CD-4 (SOUTH) LAKE CROSSING CULVERTS
PLAN AND PROFILE

CADD FILE NO.	DRAWING NO:	CEA-R1XX-XXXX	SHEET: 058 OF 71	REV: 0

REV	DATE	BY	CK	APP	DESCRIPTION	REV	DATE	BY	CK	APP	DESCRIPTION
0	01/04	RLC	JWP	–	ISSUE FOR PERMIT						

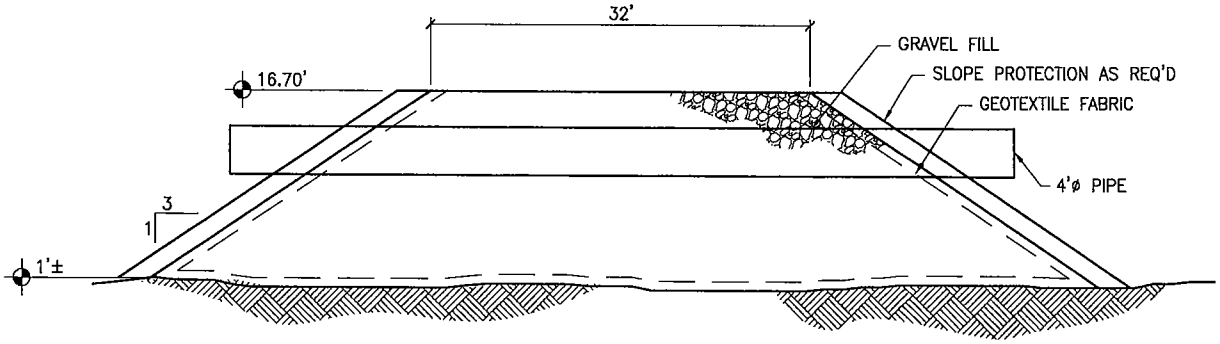

CROSS FLOW PIPE SECTION

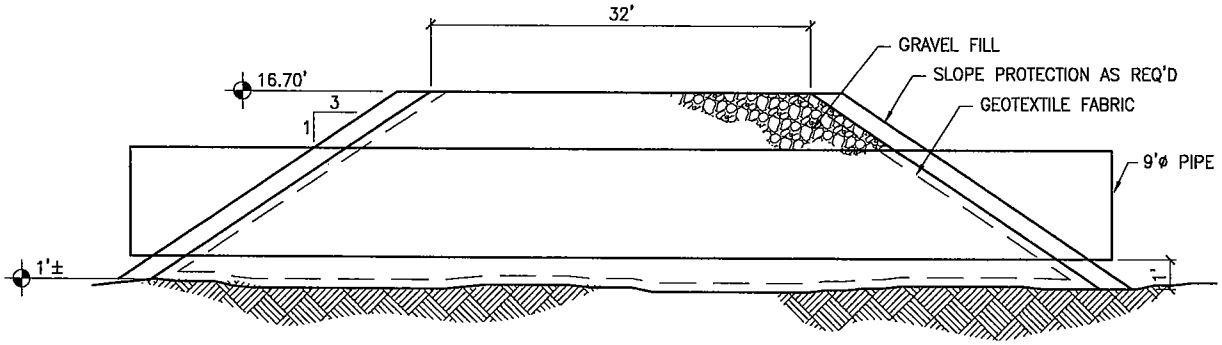

FISH PASSAGE PIPE SECTION

CONSTRUCTION SEQUENCE (8 MO.):

- WINTER PLACED GEOTEXTILE, GRAVEL FILL TO EL. +12, 4'Ø PIPES, AND SLOPE PROTECTION
- ALLOW GRAVEL FILL AND LAKE BOTTOM TO SETTLE, EXPECT UP TO 2' OF INITIAL SETTLEMENT
- EXCAVATE GRAVEL FILL AND INSTALL 9'Ø FISH PASSAGE PIPE IN LATE SUMMER, PLACE GRAVEL FILL TO FINISH GRADE PLACE SLOPE PROTECTION AS REQUIRED

PURPOSE:
PLACE FILL AND CULVERTS AS PART OF THE CD 4 ACCESS ROAD CONSTRUCTION

DATUM:
BRITISH PETROLEUM MEAN SEA LEVEL

ADJACENT PROPERTY OWNERS:
STATE OF ALASKA, KUUKPIK COORPORATION, BLM

03-19-04

P | N | D Incorporated CONSULTING ENGINEERS

ConocoPhillips Alaska, Inc.

AREA: 00 MODULE: XXXX UNIT: R1

ALPINE SATELLITE DEVELOPMENT PROGRAM
CD-4 (SOUTH) LAKE CROSSING CULVERTS
SECTIONS

CADD FILE NO.	DRAWING NO:	SHEET:	REV:
	CEA-R1XX-XXXX	059 OF 71	0

REV	DATE	BY	CK	APP	DESCRIPTION	REV	DATE	BY	CK	APP	DESCRIPTION
0	01/04	RLC	JWP	–	ISSUE FOR PERMIT						

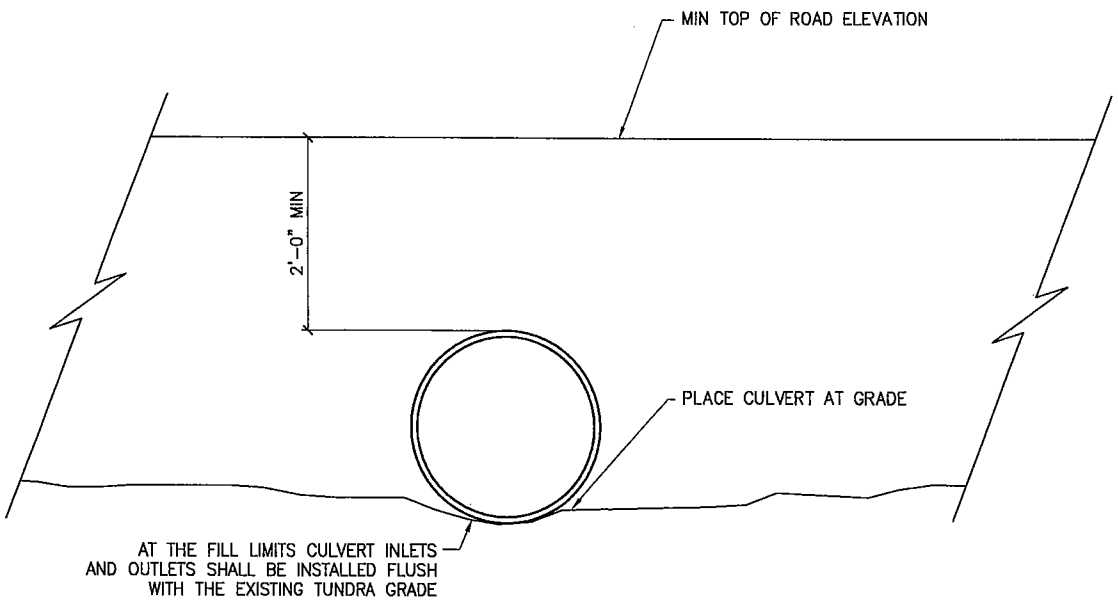

CULVERT CROSS DRAINAGE ELEVATION

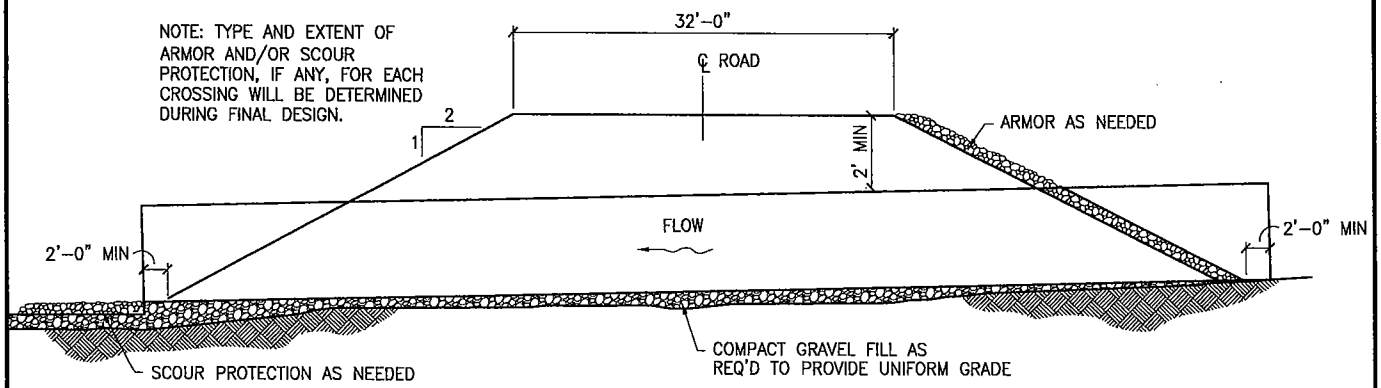

CULVERT CROSS DRAINAGE SECTION

PURPOSE:
PLACE FILL AND CULVERT AS PART OF THE ROAD CONSTRUCTION

DATUM:
BRITISH PETROLEUM MEAN SEA LEVEL

ADJACENT PROPERTY OWNERS:
STATE OF ALASKA, KUUKPIK COORPORATION, BLM

03-19-04

P | N | D Incorporated CONSULTING ENGINEERS

ConocoPhillips Alaska, Inc.

AREA: 00 MODULE: XXXX UNIT: R1

ALPINE SATELLITE DEVELOPMENT PROGRAM
TYPICAL CROSS DRAINAGE CULVERT
CROSS SECTIONS

CADD FILE NO.	DRAWING NO:	CEA–R1XX–XXXX	SHEET: 060 OF 71	REV: 0

REV	DATE	BY	CK	APP	DESCRIPTION	REV	DATE	BY	CK	APP	DESCRIPTION
0	01/04	RLC	JWP	–	ISSUE FOR PERMIT						

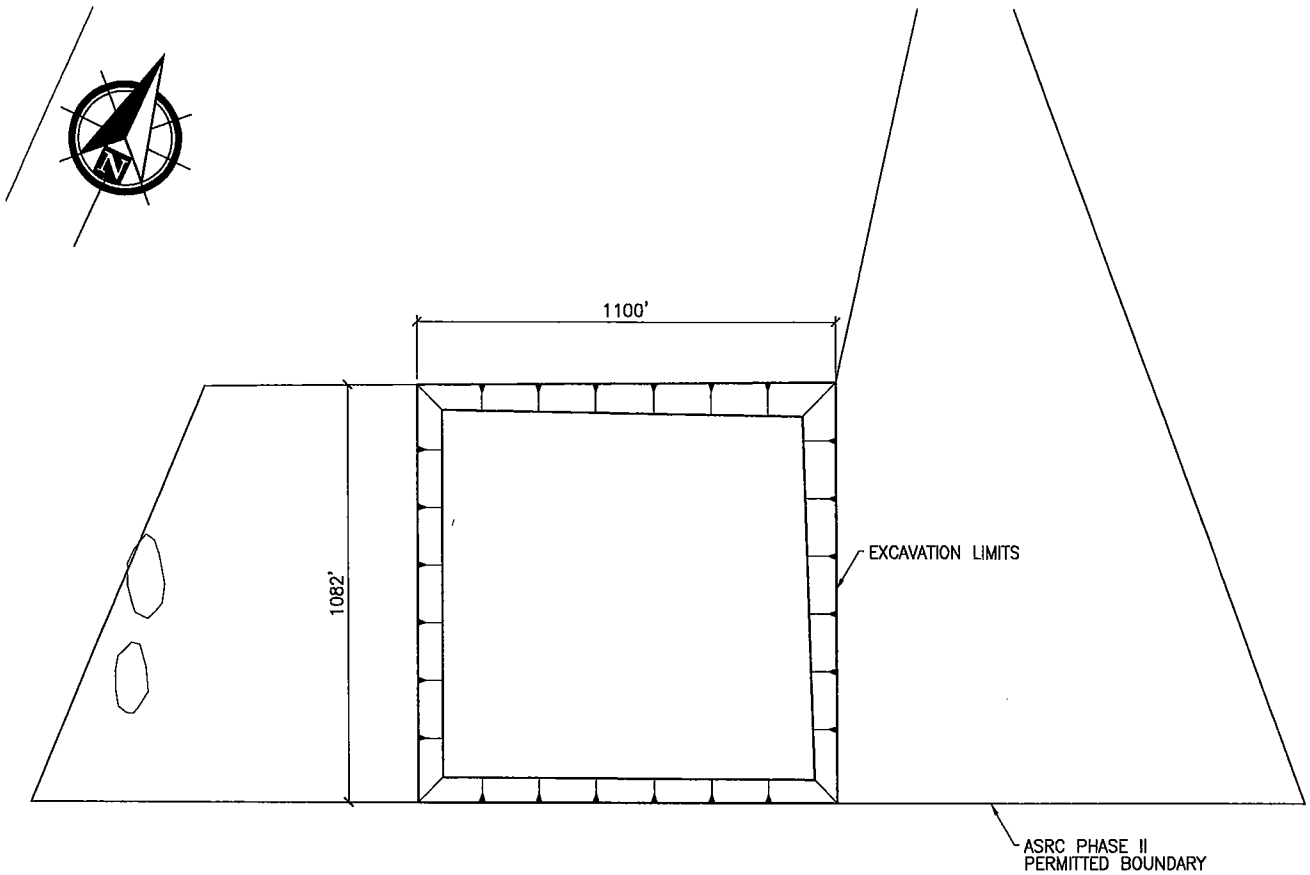

PLAN

NOTES:
1. OVERBURDEN TO BE STAGED FOR USE IN REMEDIATION OF MATERIAL SOURCE AREA UPON COMPLETION OF PROJECT.
2. PIT LAYOUT IS FOR INFORMATIONAL PURPOSES ONLY. THE FINAL CONFIGURATION WILL CONFORM TO PERMIT STIPULATION.

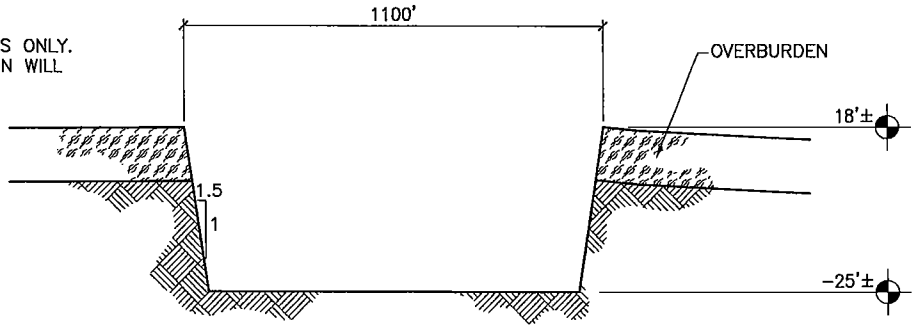

SECTION

ESTIMATED QUANTITIES

SOIL AND GRAVEL:	836,000 CY
OVERBURDEN:	840,000 CY
FOOT PRINT:	27 ACRES

03-19-04

SCALE IN FEET
250 0 250 500 750

P N D Incorporated CONSULTING ENGINEERS

ConocoPhillips Alaska, Inc.

AREA: 00 MODULE: XXXX UNIT: R1

ALPINE SATELLITE DEVELOPMENT PROGRAM
ASRC PIT GRAVEL SOURCE

CADD FILE NO.	DRAWING NO: CEA–R1XX–XXXX	SHEET: 061 OF 71	REV: 0

REV	DATE	BY	CK	APP	DESCRIPTION	REV	DATE	BY	CK	APP	DESCRIPTION
0	01/04	RLC	JWP	–	ISSUE FOR PERMIT						

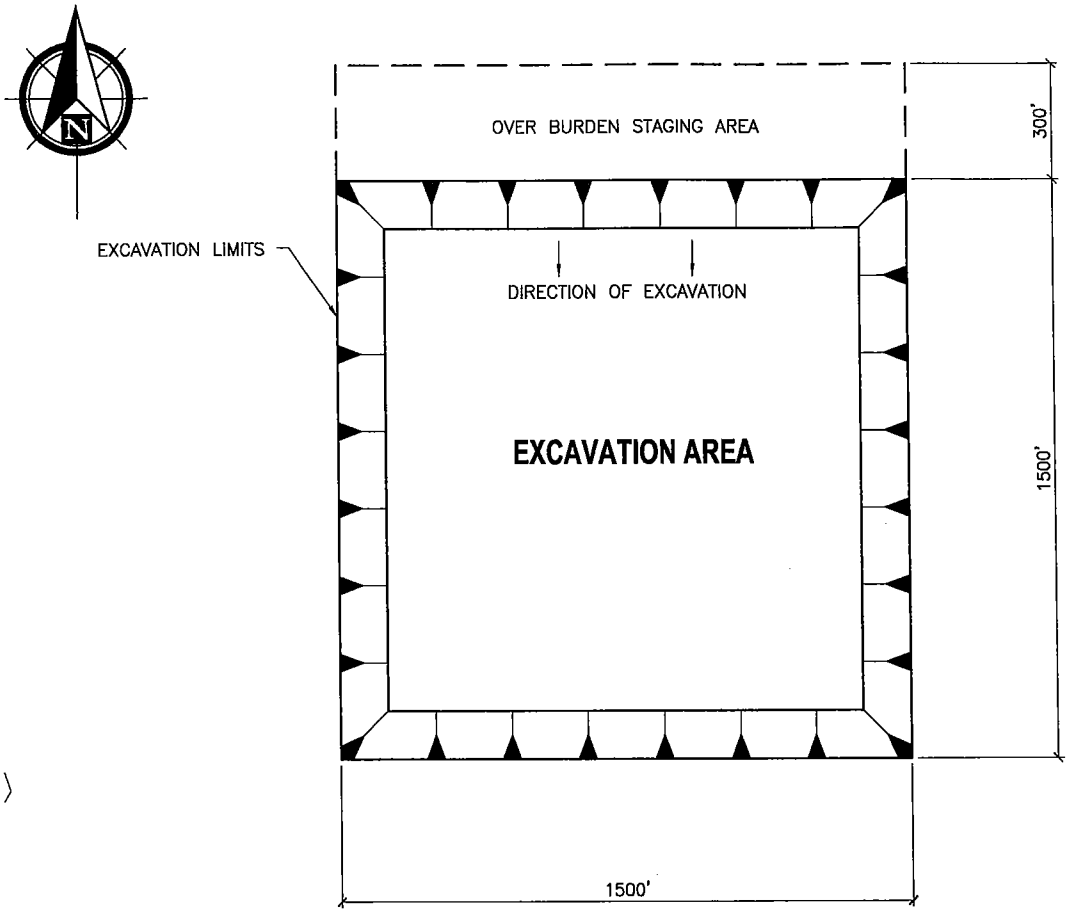

PLAN

NOTES:
1. OVERBURDEN TO BE STAGED FOR USE IN REMEDIATION OF MATERIAL SOURCE AREA UPON COMPLETION OF PROJECT.
2. PIT LAYOUT IS FOR INFORMATIONAL PURPOSES ONLY. THE FINAL CONFIGURATION WILL CONFORM TO PERMIT STIPULATION.

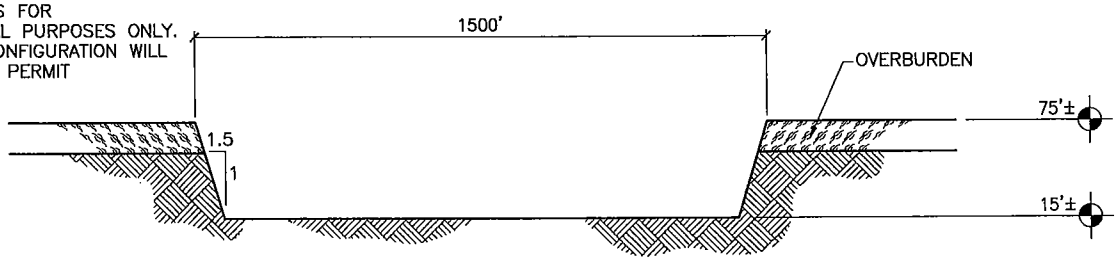

SECTION

ESTIMATED QUANTITIES

SOIL AND GRAVEL:	1,750,000 CY
OVERBURDEN:	1,350,000 CY
FOOT PRINT:	65 ACRES

03-19-04

SCALE IN FEET
250 0 250 500 750

P N D Incorporated CONSULTING ENGINEERS

ConocoPhillips Alaska, Inc.

AREA: 00 MODULE: XXXX UNIT: R1

ALPINE SATELLITE DEVELOPMENT PROGRAM
CLOVER A GRAVEL SOURCE

CADD FILE NO.	DRAWING NO: CEA–R1XX–XXXX	SHEET: 062 OF 71	REV: 0

REV	DATE	BY	CK	APP	DESCRIPTION	REV	DATE	BY	CK	APP	DESCRIPTION
0	01/04	RLC	JWP	–	ISSUE FOR PERMIT						

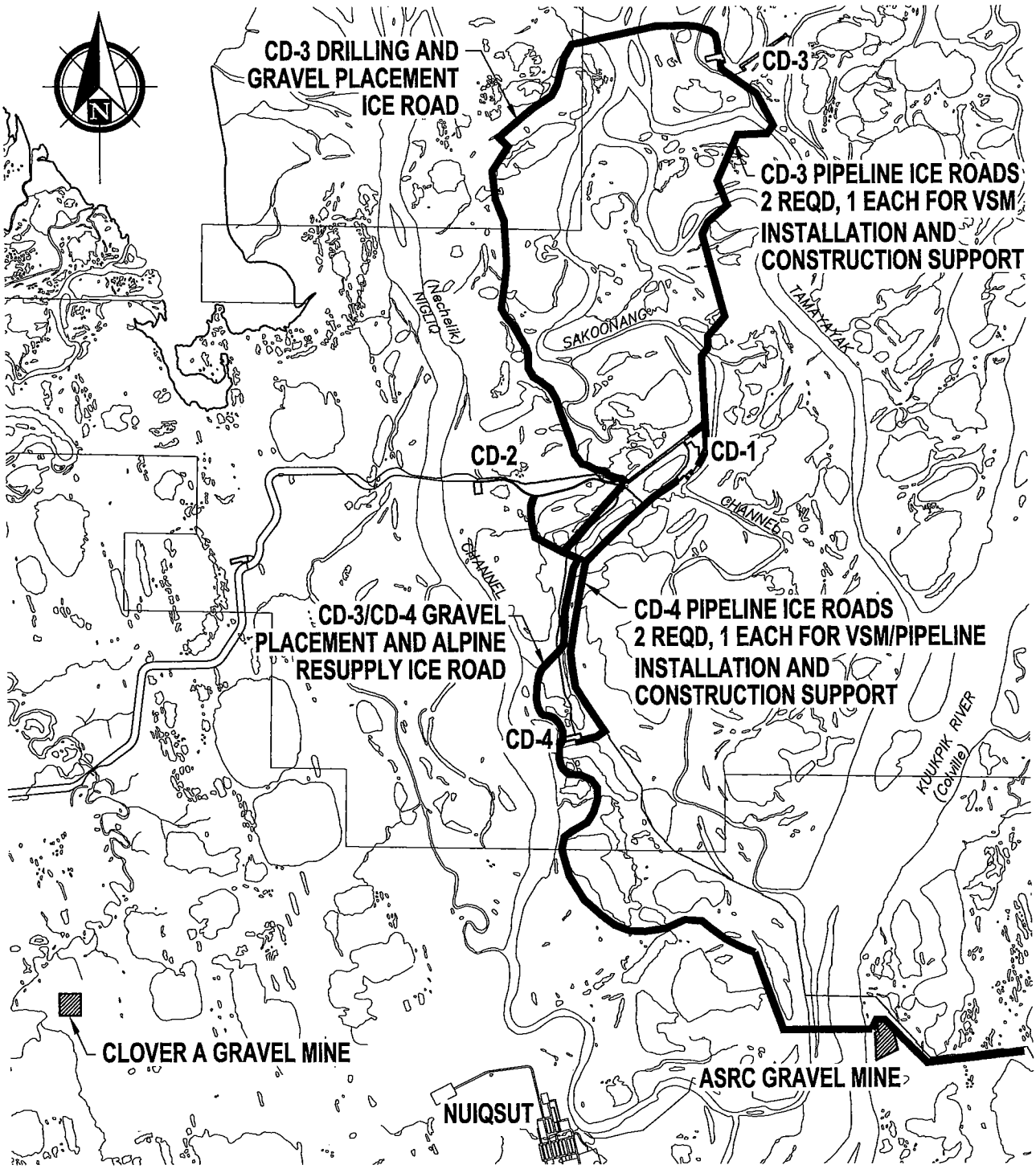

SCALE IN MILES

1 0 1 2 3

03-19-04

NOTE:
ICE ROAD LOCATIONS MAY VARY
±1 MILE FROM PROPOSED LOCATION.

PND Incorporated CONSULTING ENGINEERS

ConocoPhillips Alaska, Inc.

AREA: 00 MODULE: XXXX UNIT: R1

ALPINE SATELLITE DEVELOPMENT PROGRAM
2005 PROPOSED ICE ROADS

CADD FILE NO.	DRAWING NO:	CEA–R1XX–XXXX	SHEET: 063 OF 71	REV: 0

REV	DATE	BY	CK	APP	DESCRIPTION	REV	DATE	BY	CK	APP	DESCRIPTION
0	01/04	RLC	JWP	–	ISSUE FOR PERMIT						

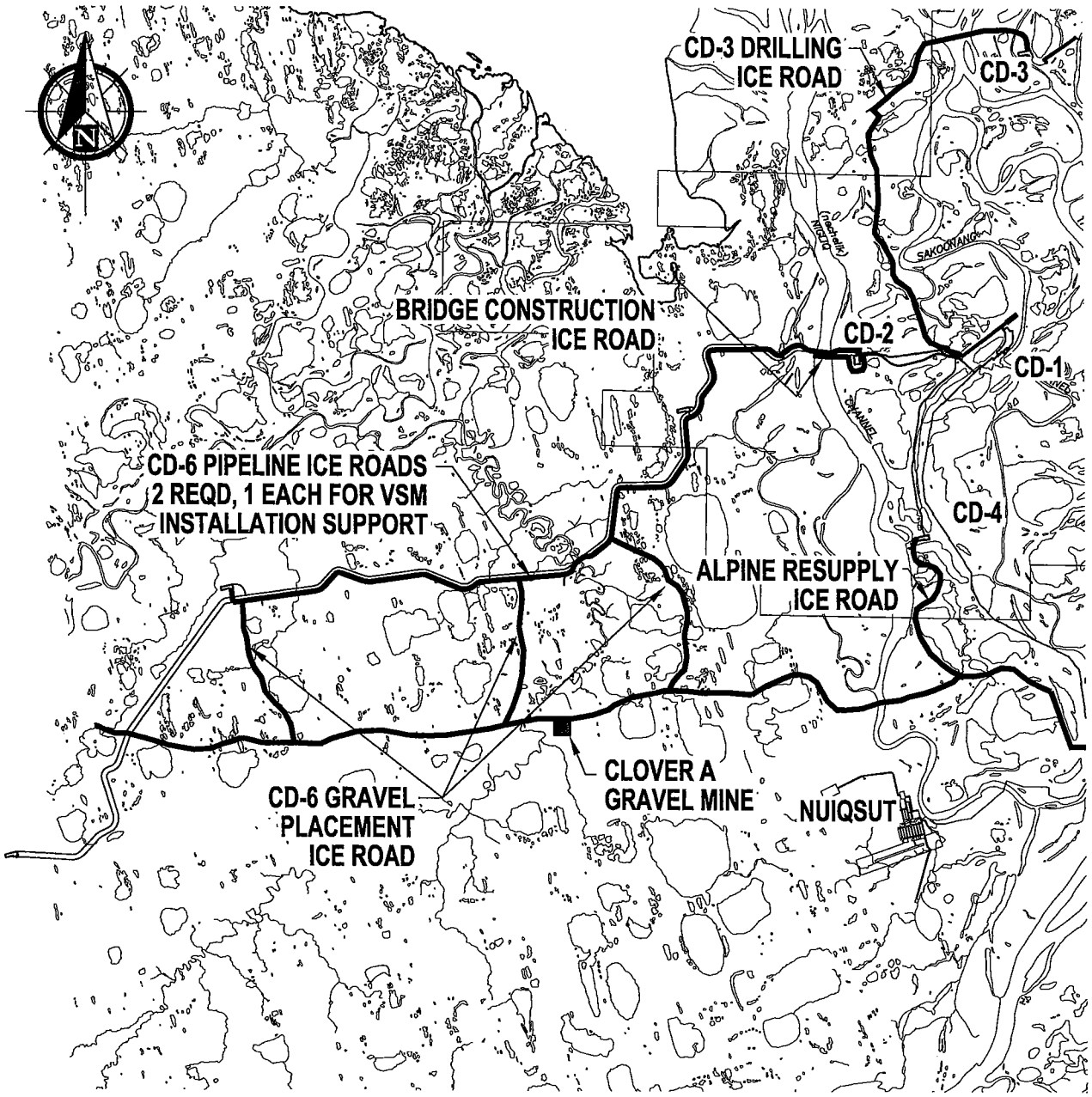

SCALE IN MILES
1.5 0 1.5 3 4.5

03-19-04

NOTE:
ICE ROAD LOCATIONS MAY VARY
±1 MILE FROM PROPOSED LOCATION.

P N D Incorporated CONSULTING ENGINEERS

ConocoPhillips Alaska, Inc.

AREA: 00 MODULE: XXXX UNIT: R1

ALPINE SATELLITE DEVELOPMENT PROGRAM
2007 PROPOSED ICE ROADS

CADD FILE NO.	DRAWING NO:	CEA–R1XX–XXXX	SHEET: 065 OF 71	REV: 0

REV	DATE	BY	CK	APP	DESCRIPTION	REV	DATE	BY	CK	APP	DESCRIPTION
0	01/04	RLC	JWP	–	ISSUE FOR PERMIT						

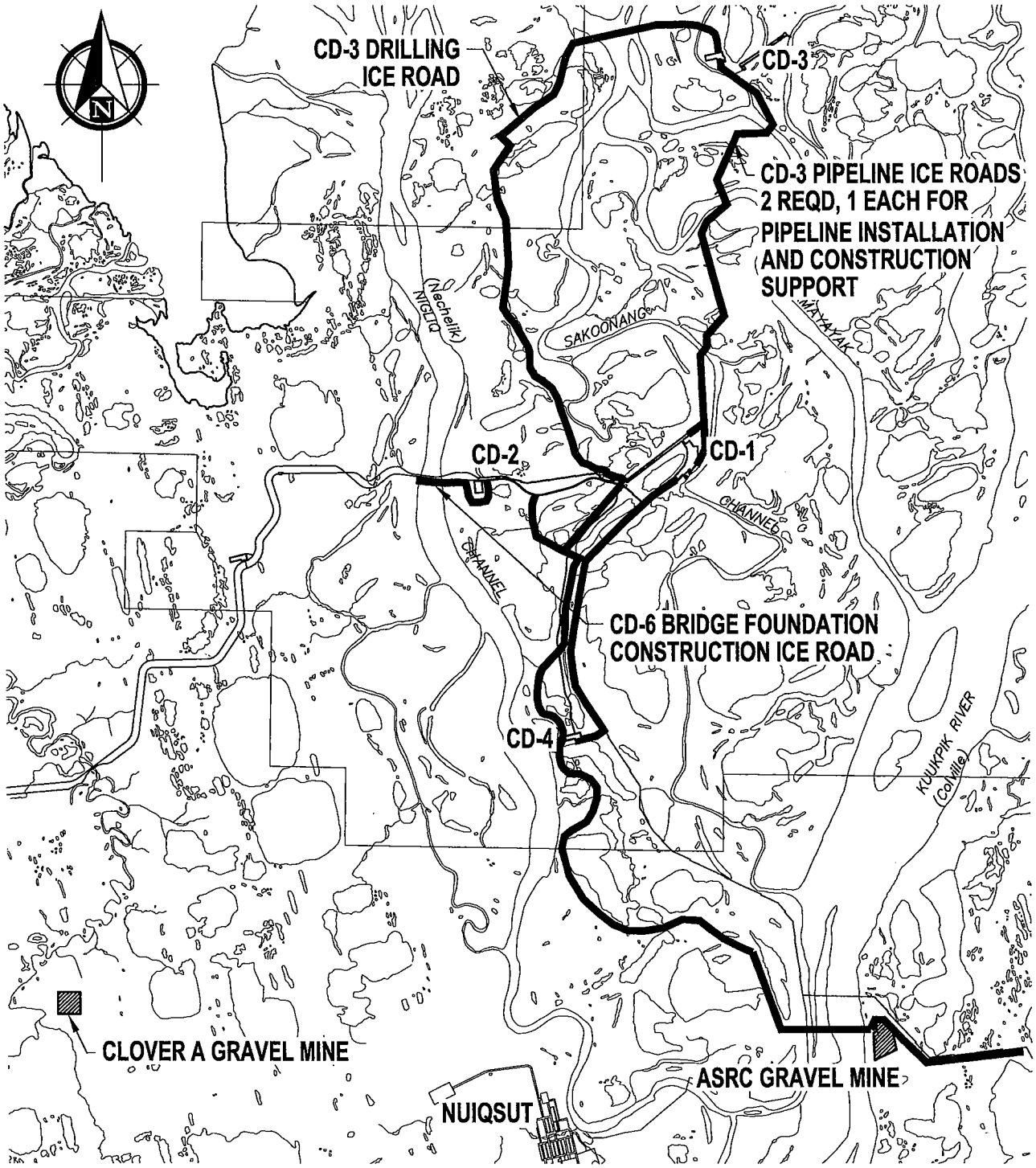

SCALE IN MILES
1 0 1 2 3

03-19-04

NOTE:
ICE ROAD LOCATIONS MAY VARY
±1 MILE FROM PROPOSED LOCATION.

PND Incorporated CONSULTING ENGINEERS

ConocoPhillips Alaska, Inc.

AREA: 00 MODULE: XXXX UNIT: R1

ALPINE SATELLITE DEVELOPMENT PROGRAM
2006 PROPOSED ICE ROADS

CADD FILE NO.	DRAWING NO: CEA–R1XX–XXXX	SHEET: 064 OF 71	REV: 0

REV	DATE	BY	CK	APP	DESCRIPTION	REV	DATE	BY	CK	APP	DESCRIPTION
0	01/04	RLC	JWP	–	ISSUE FOR PERMIT						

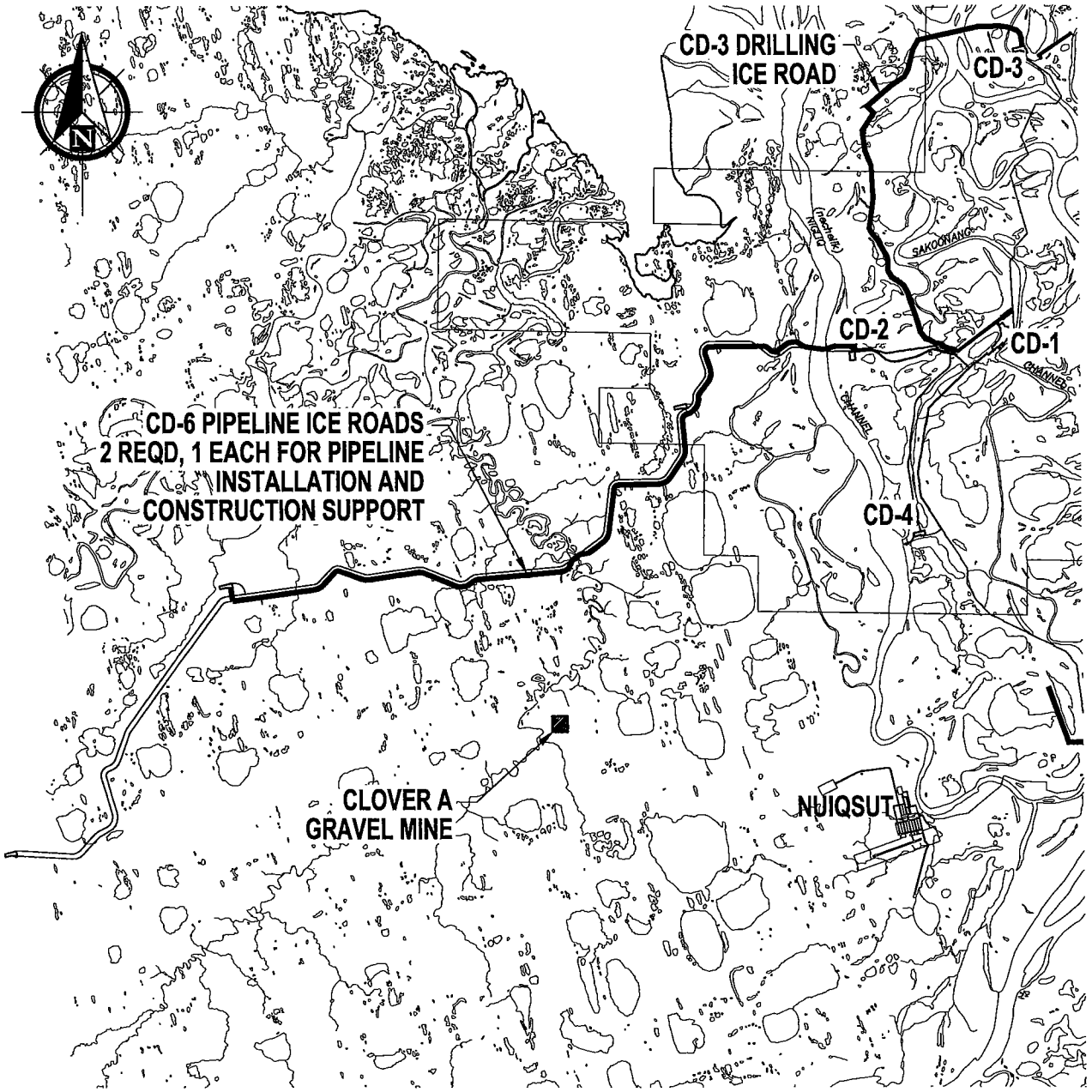

SCALE IN MILES

1.5 0 1.5 3 4.5

03-19-04

NOTE:
ICE ROAD LOCATIONS MAY VARY
±1 MILE FROM PROPOSED LOCATION.

P N D Incorporated CONSULTING ENGINEERS

ConocoPhillips Alaska, Inc.

AREA: 00 MODULE: XXXX UNIT: R1

ALPINE SATELLITE DEVELOPMENT PROGRAM
2008 PROPOSED ICE ROADS

CADD FILE NO.	DRAWING NO: CEA–R1XX–XXXX	SHEET: 066 OF 71	REV: 0

REV	DATE	BY	CK	APP	DESCRIPTION	REV	DATE	BY	CK	APP	DESCRIPTION
0	01/04	RLC	JWP	–	ISSUE FOR PERMIT						

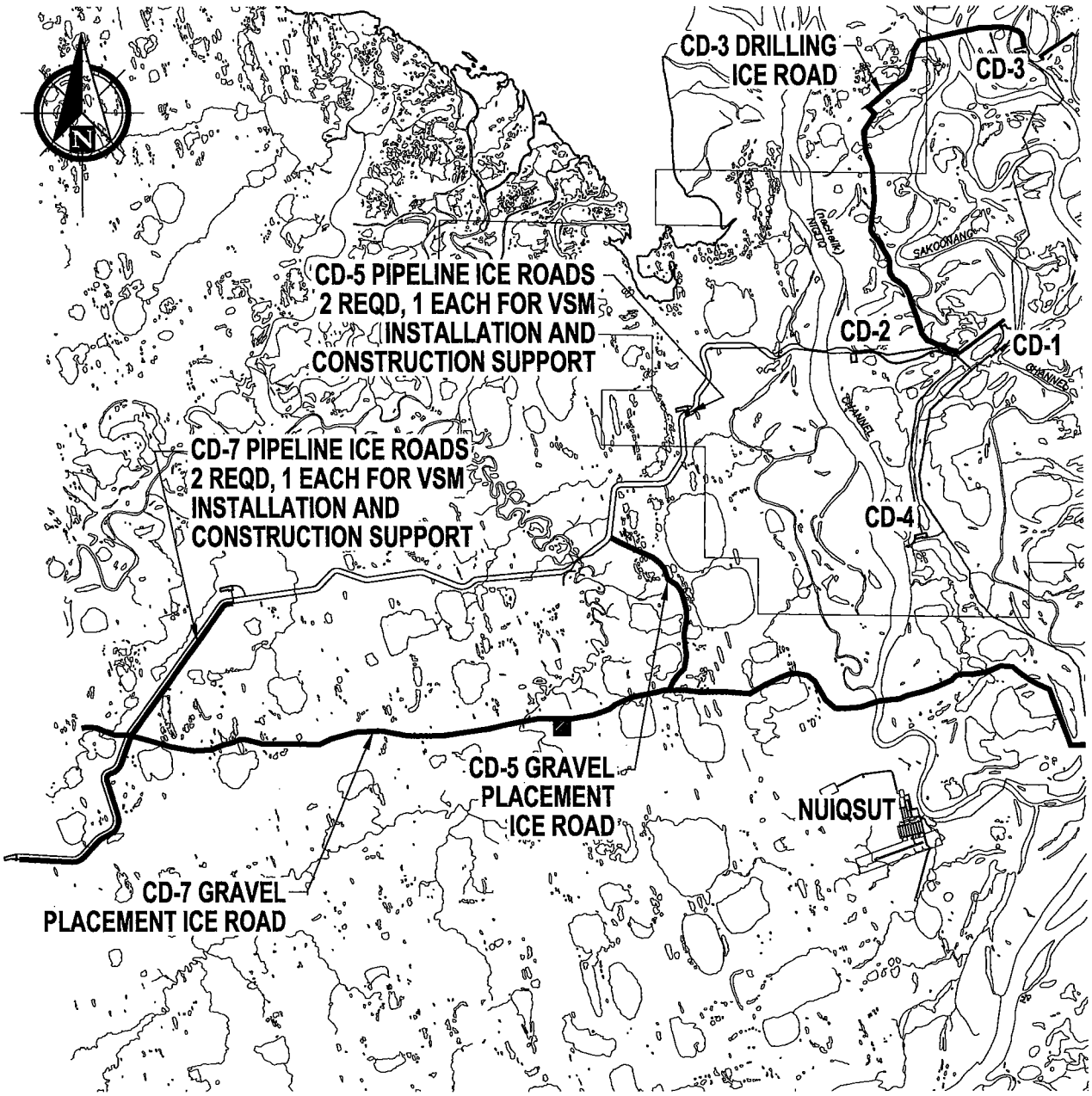

SCALE IN MILES

1.5 0 1.5 3 4.5

03-19-04

NOTE:
ICE ROAD LOCATIONS MAY VARY
±1 MILE FROM PROPOSED LOCATION.

P N D Incorporated CONSULTING ENGINEERS

ConocoPhillips Alaska, Inc.

AREA: 00 MODULE: XXXX UNIT: R1

ALPINE SATELLITE DEVELOPMENT PROGRAM
2009 PROPOSED ICE ROADS

CADD FILE NO.	DRAWING NO:	SHEET:	REV:
	CEA–R1XX–XXXX	067 OF 71	0

REV	DATE	BY	CK	APP	DESCRIPTION	REV	DATE	BY	CK	APP	DESCRIPTION
0	01/04	RLC	JWP	–	ISSUE FOR PERMIT						

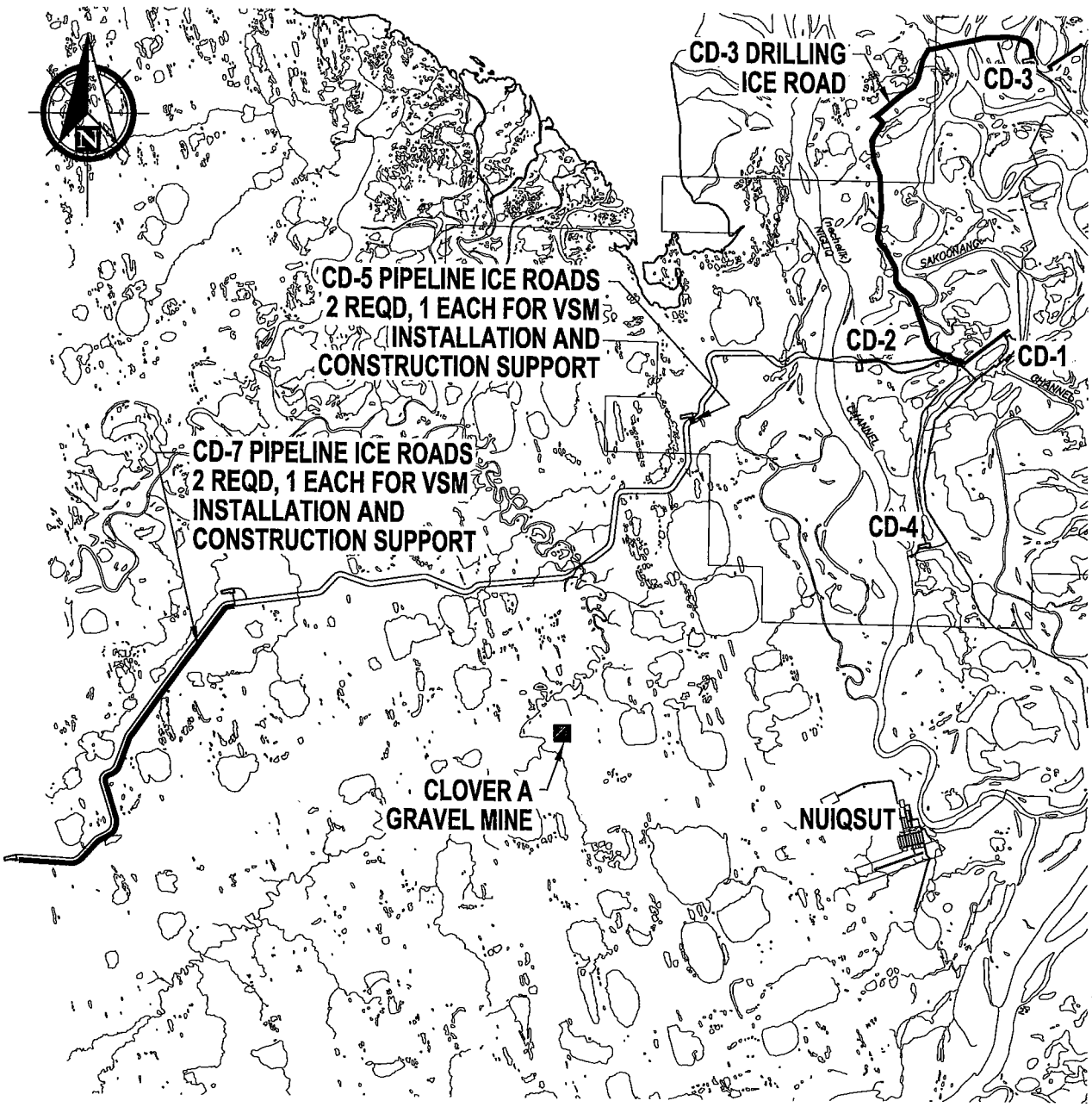

SCALE IN MILES

1.5 0 1.5 3 4.5

03-19-04

NOTE:
ICE ROAD LOCATIONS MAY VARY
±1 MILE FROM PROPOSED LOCATION.

P N D Incorporated CONSULTING ENGINEERS

ConocoPhillips Alaska, Inc.

AREA: 00 MODULE: XXXX UNIT: R1

ALPINE SATELLITE DEVELOPMENT PROGRAM
2010 PROPOSED ICE ROADS

CADD FILE NO.	DRAWING NO:	CEA–R1XX–XXXX	SHEET: 068 OF 71	REV: 0

REV	DATE	BY	CK	APP	DESCRIPTION	REV	DATE	BY	CK	APP	DESCRIPTION
0	01/04	RLC	JWP	–	ISSUE FOR PERMIT						

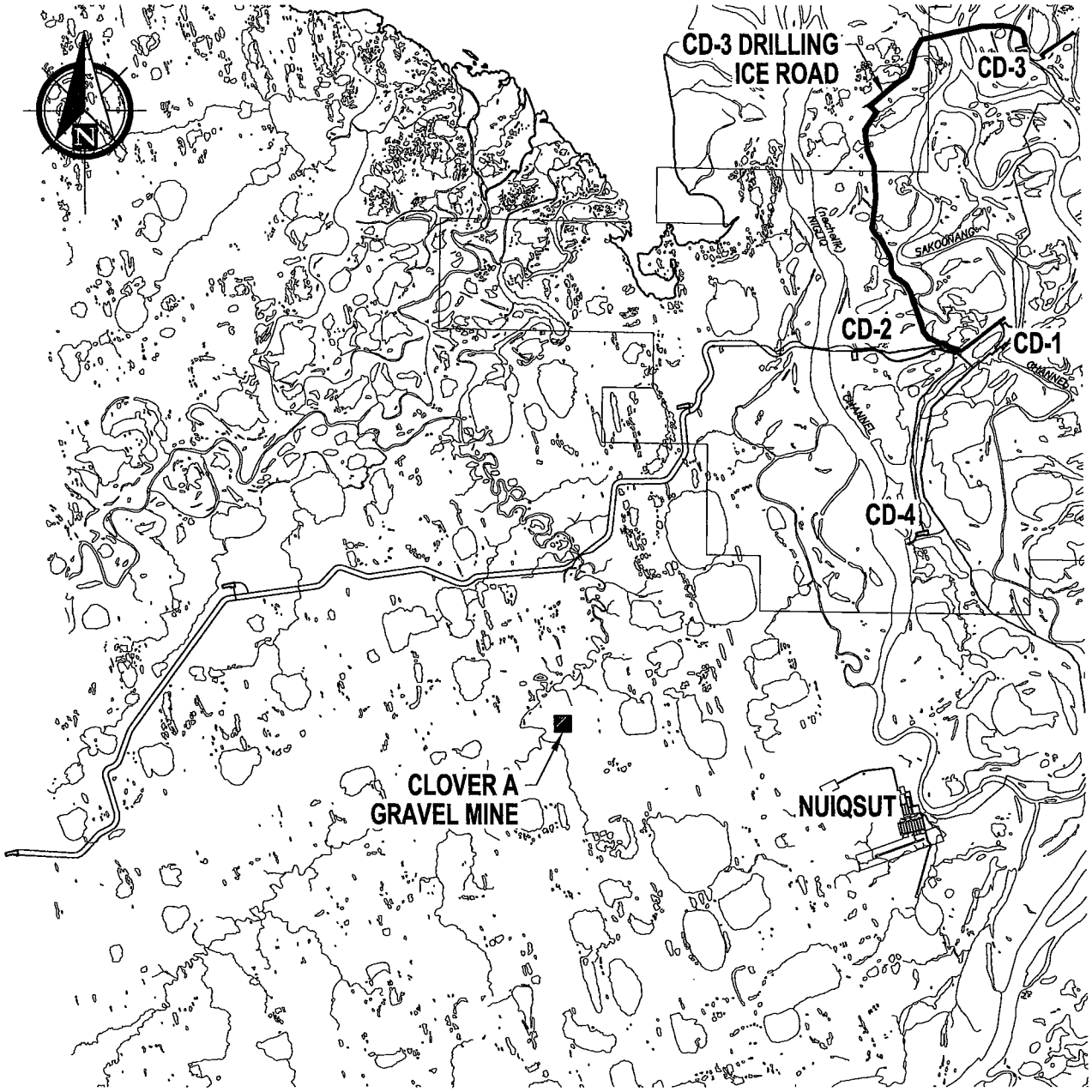

SCALE IN MILES

1.5 0 1.5 3 4.5

03-19-04

NOTE:
ICE ROAD LOCATIONS MAY VARY
±1 MILE FROM PROPOSED LOCATION.

P | N | D Incorporated CONSULTING ENGINEERS

ConocoPhillips Alaska, Inc.

AREA: 00 MODULE: XXXX UNIT: R1

ALPINE SATELLITE DEVELOPMENT PROGRAM
2011 PROPOSED ICE ROADS

CADD FILE NO. | DRAWING NO: CFA–R1XX–XXXX | SHEET: 069 OF 71 | REV: 0

REV	DATE	BY	CK	APP	DESCRIPTION	REV	DATE	BY	CK	APP	DESCRIPTION
0	01/04	RLC	JWP	–	ISSUE FOR PERMIT						

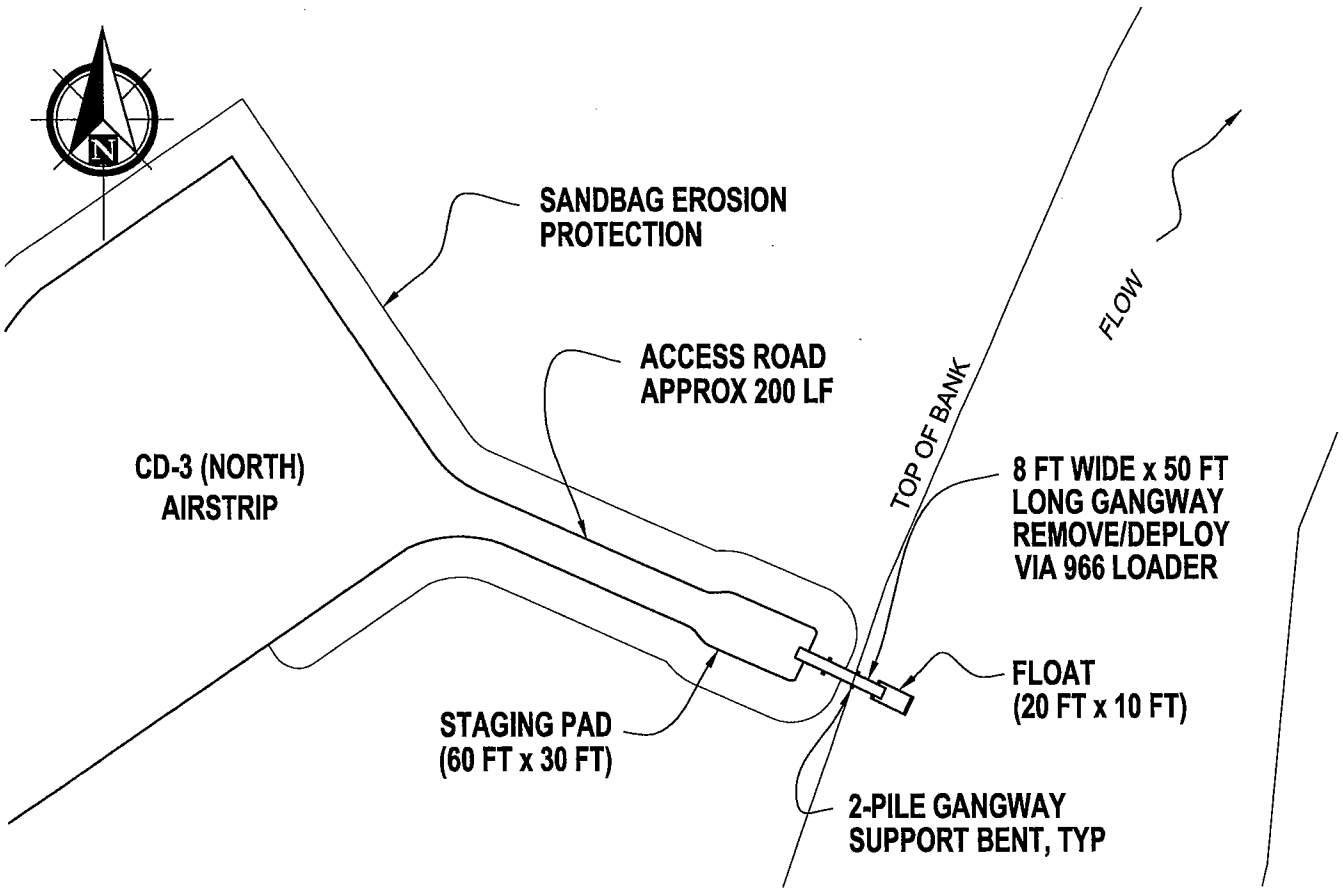

PLAN

SCALE IN FEET

50 0 50 100 150

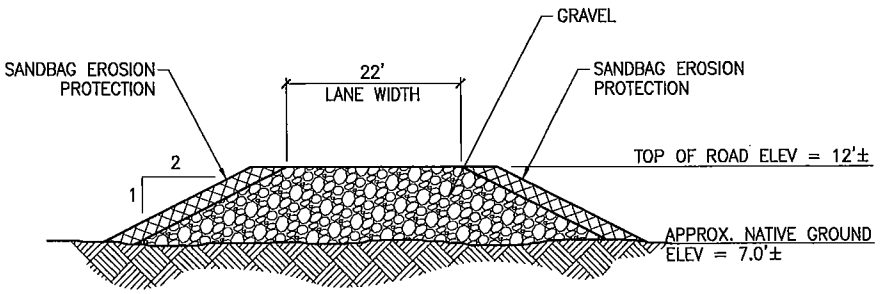

CD-3 TYPICAL ROAD SECTION

NTS

03-19-04

P N D Incorporated CONSULTING ENGINEERS

ConocoPhillips Alaska, Inc.

AREA: 00 MODULE: XXXX UNIT: R1

ALPINE SATELLITE DEVELOPMENT PROGRAM
CD-3 (NORTH) BOAT LAUNCH

CADD FILE NO.	DRAWING NO:	SHEET:	REV:
	CEA-R1XX-XXXX	070 OF 71	0

REV	DATE	BY	CK	APP	DESCRIPTION	REV	DATE	BY	CK	APP	DESCRIPTION
0	01/04	RLC	JWP	–	ISSUE FOR PERMIT						

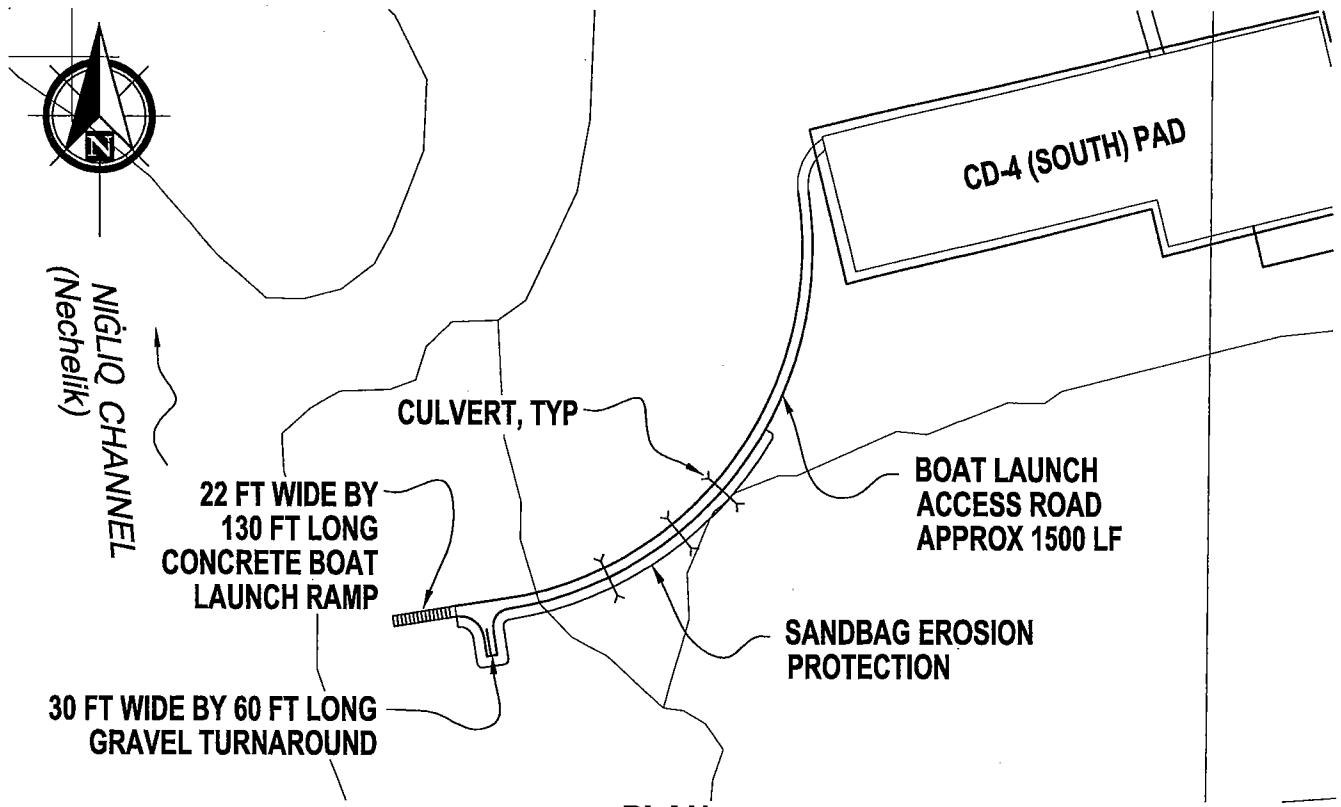

PLAN

SCALE IN FEET

200 0 200 400 600

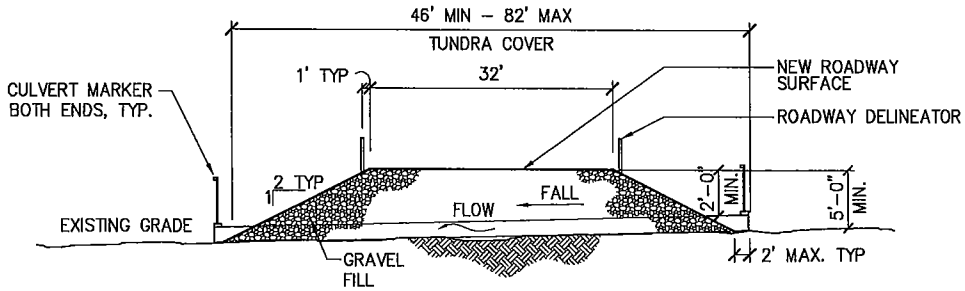

CD-4 TYPICAL ROADWAY SECTION AT CULVERTS

NOT TO SCALE

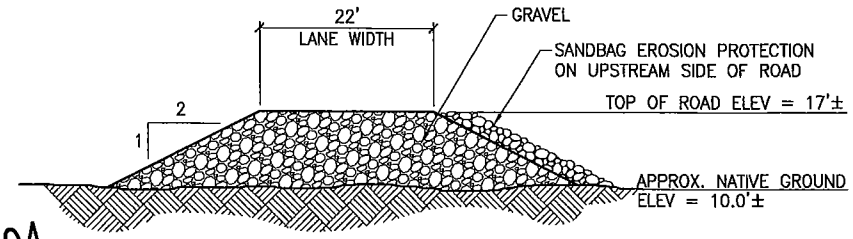

03-19-04

CD-4 TYPICAL ROAD SECTION

PND Incorporated CONSULTING ENGINEERS

ConocoPhillips Alaska, Inc.

AREA: 00 MODULE: XXXX UNIT: R1

ALPINE SATELLITE DEVELOPMENT PROGRAM
CD-4 (SOUTH) BOAT LAUNCH

CADD FILE NO. | DRAWING NO: CFA-R1XX-XXXX | SHEET: 071 OF 71 | REV: 0