US Army Corps
of Engineers
Alaska District

Public Notice of Application for Permit

Regulatory Branch (1145b)
Post Office Box 6898
Elmendorf AFB, Alaska 99506-6898

PUBLIC NOTICE DATE: 13 August 2003

EXPIRATION DATE: 15 September 2003

REFERENCE NUMBER: M-1978-0193

WATERWAY NUMBER: Sitka Sound 153

Interested parties are hereby notified that an application has been received for a Department of the Army permit for certain work in waters of the United States as described below and shown on the attached plan.

APPLICANT: Mr. Kevin and Mrs. Tina McNamee, P. O. Box 6243, Sitka, Alaska 99835

LOCATION: This project is located at Latitude 57°07'00" N., Longitude 135°23'15"W, in section 10, T. 55 S., R. 63 E., at Mile 4.4 Halibut Point Road, Copper River Meridian Sitka, Alaska.

WORK: The fill footprint (clean 12 inch minus shot rock) for this project is 50' x 150' (9,100 ft^2 including the toe ends) with a total volume of 1,300 CY. About 3,100 ft^2 and 650 CY will be discharged below the HTL to elevation 20 (MLLW) for construction of a 30' x 152' two story four-plex with office and gear storage. The 1.5 to 1 slope will be faced with armor rock (320 ft^2 total; 172 ft^2 of this is seaward of the HTL).

PURPOSE: The purpose of this project is to provide ocean front lodging for charter fishing clients next to the boat dock.

COASTAL ZONE MANAGEMENT ACT CERTIFICATION: Section 307(c)(3) of the Coastal Zone, Management Act of 1972, as amended by 16 U.S.C. 1456(c)(3), requires the applicant to certify that the described activity affecting land or water uses in the Coastal Zone complies with the Alaska Coastal Management Program. A permit will not be issued until the Office of Management and Budget, Division of Governmental Coordination has concurred with the applicant's certification.

PUBLIC HEARING: Any person may request, in writing, within the comment period specified in this notice, that a public hearing be held to consider this application. Requests for public hearings shall state, with particularity, reasons for holding a public hearing.

CULTURAL RESOURCES: The latest published version of the Alaska Heritage Resources Survey (AHRS) has been consulted for the presence or absence of historic properties, including those listed in or eligible for inclusion in the National Register of Historic Places. There was one notation in AHRS (SIT-0032/SIT-00326); BIA investigators found a hand maul in the streambed, below roots of fallen spruce on a small cove between Halibut Point and Harbor Point, 8 km NW of Sitka. There are no listed or eligible properties in the vicinity of the worksite. Consultation of the AHRS constitutes the extent of cultural resource investigations by the District Engineer at this time, and he is otherwise unaware of the presence of such resources. This application is being coordinated with the State Historic Preservation Office (SHPO). Any comments SHPO may have concerning presently unknown archeological or historic data that may be lost or destroyed by work under the requested permit will be considered in our final assessment of the described work.

ENDANGERED SPECIES: The project area is within the known or historic range of the stellar sea lion and humpback whale. No threatened or endangered species are known to use the project area. Preliminarily, the described activity will not affect threatened or endangered species, or their critical habitat designated as endangered or threatened, under the Endangered Species Act of 1973 (87 Stat. 844). This application is being coordinated with the U.S. Fish and Wildlife Service and the National Marine Fisheries Service. Any comments they may have concerning endangered or threatened wildlife or plants or their critical habitat will be considered in our final assessment of the described work.

ESSENTIAL FISH HABITAT: The proposed work is being evaluated for possible effects to Essential Fish Habitat (EFH) pursuant to the Magnuson Stevens Fishery Conservation and Management Act of 1996 (MSFCMA), 16 U.S.C. et seq and associated federal regulations found at 50 CFR 600 Subpart K. The Alaska District includes areas of EFH as Fishery Management Plans. We have reviewed the January 20, 1999, North Pacific Fishery Management Council's Environmental Assessment to locate EFH area as identified by the National Marine Fisheries Service (NMFS). EFH mapping shows that the general shoreline area for the proposed project provides habitat for snow crab and walleye pollock. We have determined that the described activity within the proposed area will not adversely affect EFH, including anadromous fish and federally managed fishery resources.

SPECIAL AREA DESIGNATION: There are eelgrass beds seaward of the high tide line at this location. The applicant has advised that the toe of the fill for the proposed project (650 CY of shot rock total fill below HTL) will be approximately 118 ft. from the eelgrass beds.

EVALUATION: The decision whether to issue a permit will be based on an evaluation of the probable impacts including cumulative impacts of the proposed activity and its intended use on the public interest. Evaluation of the probable impacts which the proposed activity may have on the public interest requires a careful weighing of all those factors which become relevant in each particular case. The benefits which reasonably may be expected to accrue from the proposal must be balanced against its reasonably foreseeable detriments. The decision whether to authorize a proposal, and if so, the conditions under which it will be allowed to occur, are therefore determined by the outcome of the general balancing process. That decision should reflect the national concern for both protection and utilization of important resources. All factors which may be relevant to the proposal must be considered including the cumulative effects thereof. Among those are conservation, economics, aesthetics, general environmental concerns, wetlands, cultural values, fish and wildlife values, flood hazards, floodplain values, land use, navigation, shore erosion and accretion, recreation, water supply and conservation, water quality, energy needs, safety, food and fiber production, mineral needs, considerations of property ownership, and, in general, the needs

and welfare of the people. For activities involving 404 discharges, a permit will be denied if the discharge that would be authorized by such permit would not comply with the Environmental Protection Agency's 404(b)(1) guidelines. Subject to the preceding sentence and any other applicable guidelines or criteria (see Sections 320.2 and 320.3), a permit will be granted unless the District Engineer determines that it would be contrary to the public interest.

The Corps of Engineers is soliciting comments from the public; Federal, State, and local agencies and officials; Indian Tribes; and other interested parties in order to consider and evaluate the impacts of this proposed activity. Any comments received will be considered by the Corps of Engineers to determine whether to issue, modify, condition or deny a permit for this proposal. To make this decision, comments are used to assess impacts on endangered species, historic properties, water quality, general environmental effects, and the other public interest factors listed above. Comments are used in the preparation of an Environmental Assessment and/or an Environmental Impact Statement pursuant to the National Environmental Policy Act. Comments are also used to determine the need for a public hearing and to determine the overall public interest of the proposed activity.

Comments on the described work, with the reference number, should reach this office no later than the expiration date of this Public Notice to become part of the record and be considered in the decision. Please contact Ms. V. Glooschenko at (907) 753-2720 or toll free in Alaska at (800) 478-2712, if further information is desired concerning this notice.

AUTHORITY: This permit will be issued or denied under the following authorities:

( ) Perform work in or affecting navigable waters of the United States - Section 10 Rivers and Harbors Act 1899 (33 U.S.C. 403).

(X) Discharge dredged or fill material into waters of the United States - Section 404 Clean Water Act (33 U.S.C. 1344). Therefore, our public interest review will consider the guidelines set forth under Section 404(b) of the Clean Water Act (40 CFR 230).

A plan, Notice of Application for Certification of Consistency with the Alaska Coastal Management Program, and Notice of Application for State Water Quality Certification are attached to this Public Notice.

District Engineer
U.S. Army, Corps of Engineers

Attachments

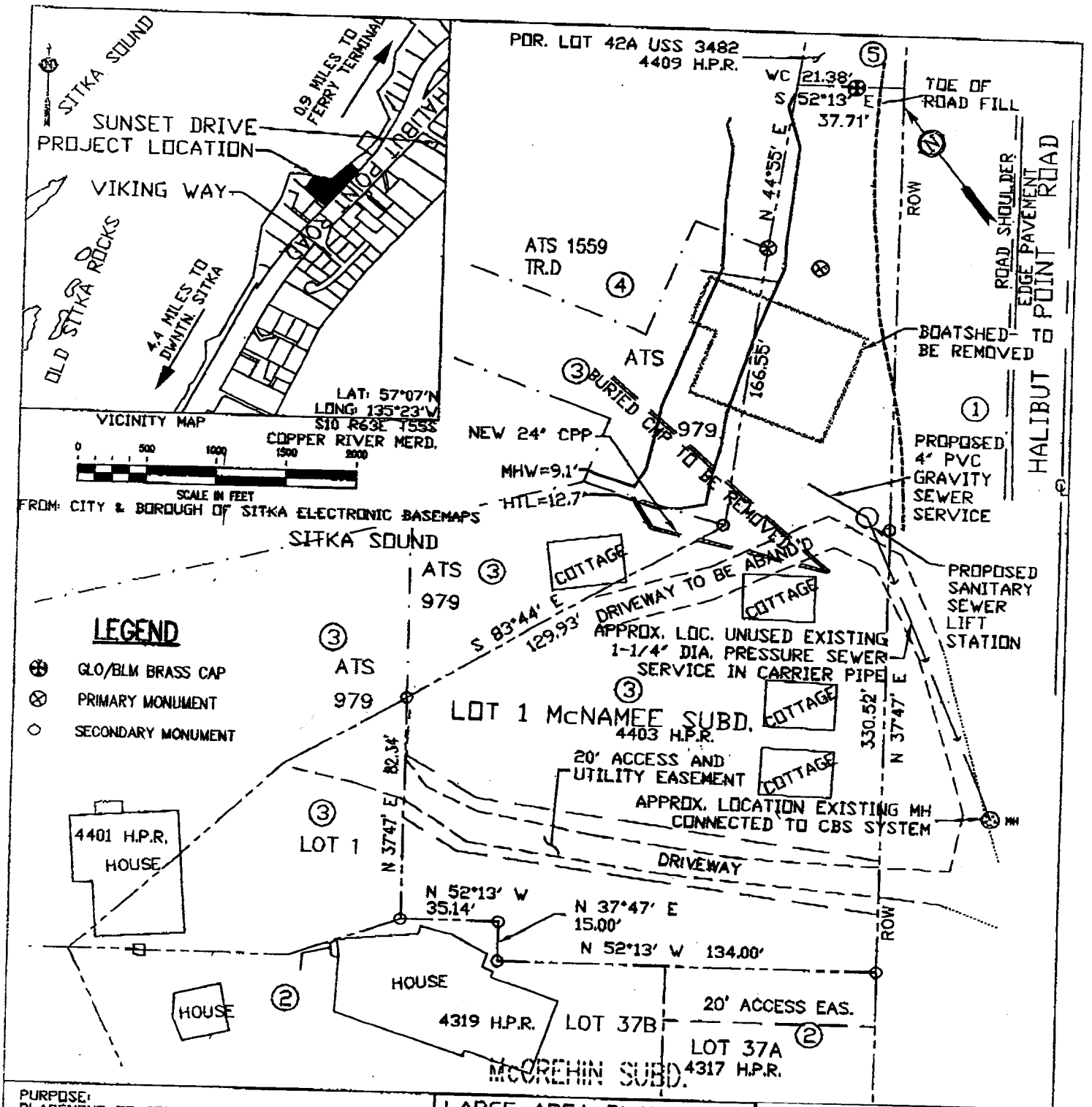

PURPOSE:
PLACEMENT OF STRUCTUAL FILL TO ELEVATION 20.0' FOR CONSTRUCTION OF A 4-PLEX WITH OFFICE & GEAR STORAGE TO HOUSE CHARTER FISHING CLIENTS
DATUM: MLLW=0.0'
KEY TO ADJECENT PROPERTY OWNERS:
1. STATE OF ALASKA DOT/PF
2. LARRY AND ROBYN McCREHIN
3. KEVIN McNAMEE
4. CITY & BOROUGH OF SITKA
5. BRUCE & PEGGY GIPPLE

LARGE AREA PLAN VIEW

SCALE IN FEET
1"=50'

KEVIN McNAMEE
PO BOX 6243
SITKA AK 99835

Kevin and Tina McNamee
WATERWAY: Sitka Sound 153
FILE #:: M-1978-0193
LOCATION: 4.4 miles north of Sitka on Halibut Point Rd.
DATE: 07/15/2003
Sheet 1 of 3

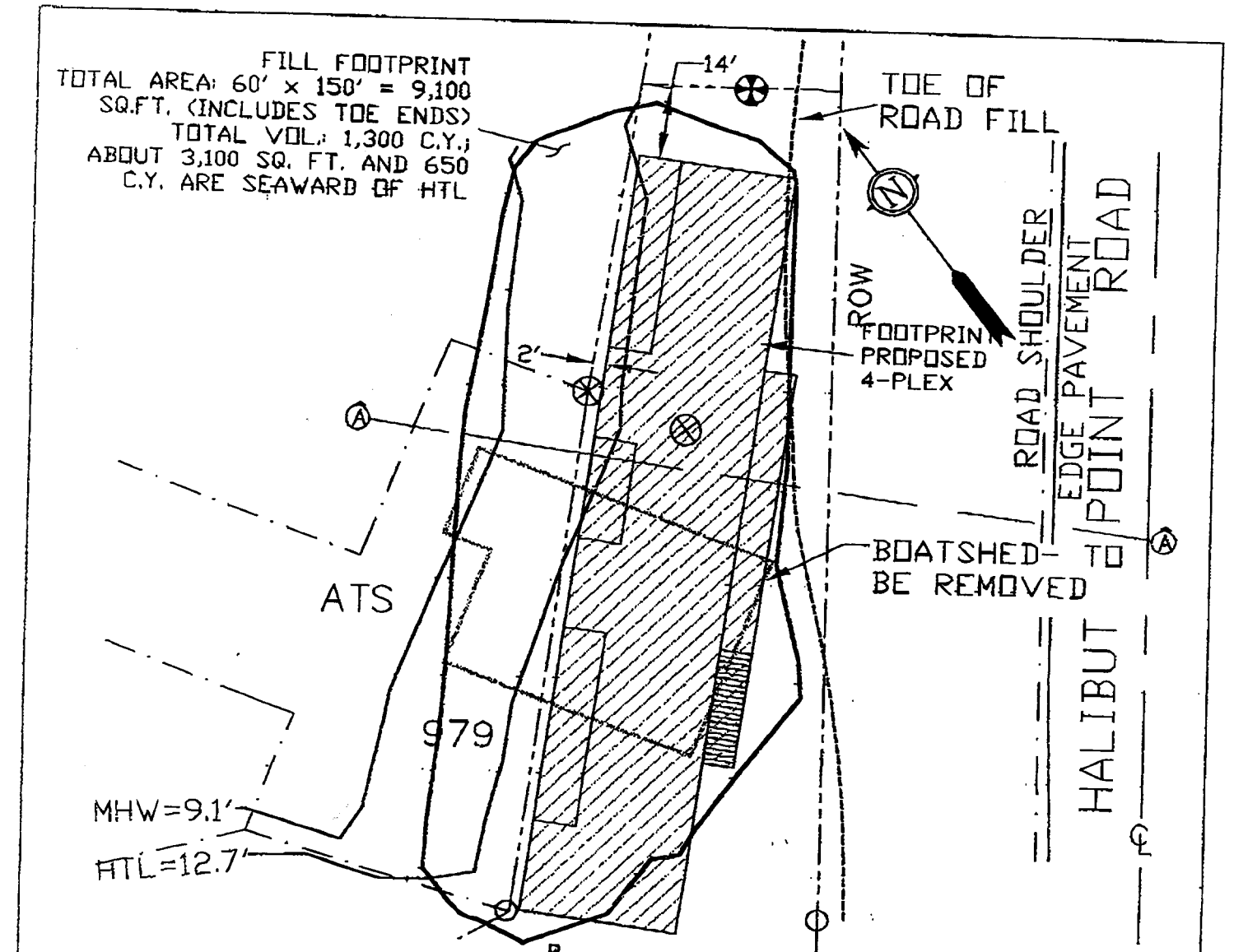

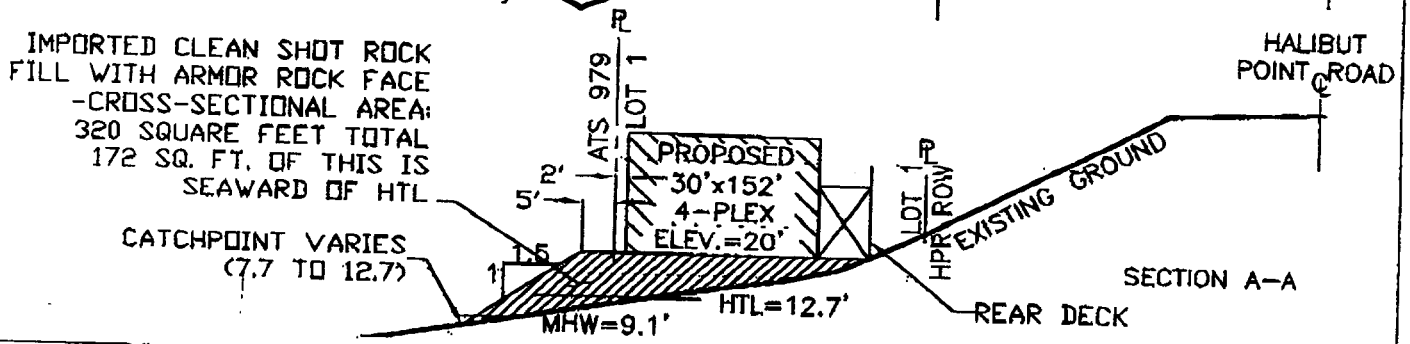

PURPOSE:
PLACEMENT OF STRUCTURAL FILL TO ELEVATION 20.0' FOR CONSTRUCTION OF A 4-PLEX WITH OFFICE & GEAR STORAGE TO HOUSE CHARTER FISHING CLIENTS

DATUM: MLLW=0.0'

KEY TO ADJECENT PROPERTY OWNERS:
1. STATE OF ALASKA DOT/PF
2. LARRY AND ROBYN McCREHIN
3. KEVIN McNAMEE
4. CITY & BOROUGH OF SITKA
5. BRUCE & PEGGY GIPPLE

CLOSE UP PLAN VIEW & PROFILE VIEW

0 15 30 45 60
SCALE IN FEET
1'=30'

KEVIN McNAMEE
PO BOX 6243
SITKA AK 99835

Kevin and Tina McNamee
WATERWAY: Sitka Sound 153
FILE #:: M-1978-0193
LOCATION: 4.4 miles north of Sitka on Halibut Point Rd.
DATE: 07/15/2003
Sheet 2 of 3

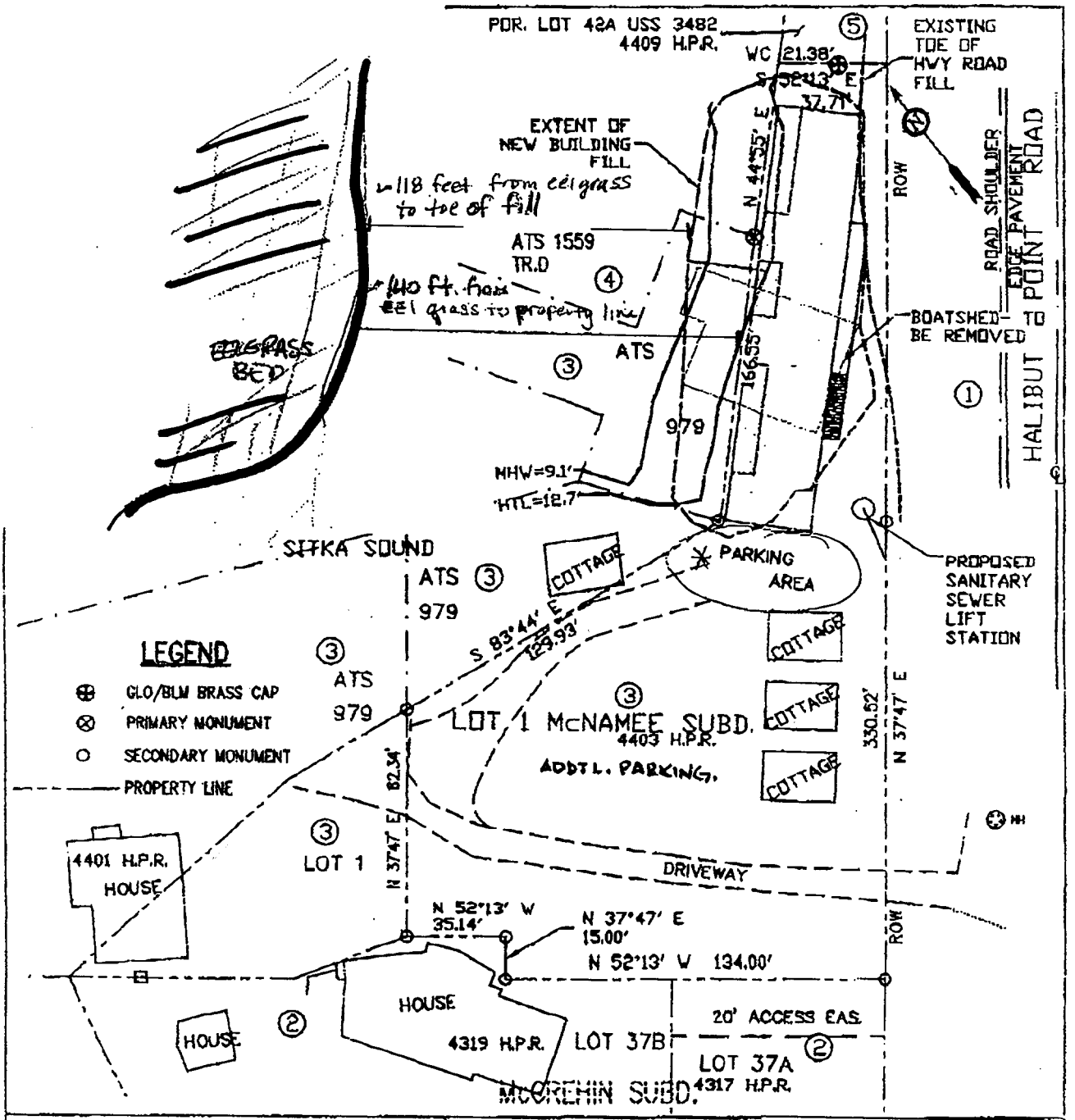

PURPOSE:
PLACEMENT OF STRUCTURAL FILL TO ELEVATION 20.0' FOR CONSTRUCTION OF A 4-PLEX WITH OFFICE & GEAR STORAGE TO HOUSE CHARTER FISHING CLIENTS
DATUM: MLLW=0.0'
KEY TO ADJACENT PROPERTY OWNERS:
1. STATE OF ALASKA DOT/PF
2. LARRY AND ROBYN McCREHIN
3. KEVIN McNAMEE
4. CITY & BOROUGH OF SITKA
5. BRUCE & PEGGY GIPPLE

PROPOSED SITE PLAN

0 25 50 75 100
SCALE IN FEET
1"=50'

KEVIN McNAMEE
PO BOX 6243
SITKA AK 99835

Kevin and Tina McNamee
WATERWAY: Sitka Sound
153
FILE #:: M-1978-0193
LOCATION: 4.4 miles north of Sitka on Halibut Point Rd.
DATE: 08/07/2003
Sheet 3 of 3

(*) GUESTS TO ACCESS LODGE BY CAR OR FOOT VIA PARKING AREA.

FRANK H. MURKOWSKI, GOVERNOR

STATE OF ALASKA

OFFICE OF THE GOVERNOR

OFFICE OF PROJECT MANAGEMENT AND PERMITTING
ALASKA DEPARTMENT OF NATURAL RESOURCES

OFFICE OF PROJECT MANAGEMENT AND PERMITTING
302 GOLD STREET, SUITE 202
JUNEAU, ALASKA 99801-1127
PHONE: (907) 465-3562/FAX: (907) 465-3075

NOTICE OF APPLICATION FOR CERTIFICATION OF CONSISTENCY WITH THE ALASKA COASTAL MANAGEMENT PROGRAM

Notice is hereby given that a request is being filed with the Division of Governmental Coordination for a consistency determination, as provided in Section 307(c)(3) of the Coastal Zone Management Act of 1972, as amended [16 U.S.C. 1456(c)(3)], that the project described in the Corps of Engineers Public Notice No. **M-1978-0193, Sitka Sound 153,** will comply with the Alaska Coastal Management Program and that the project will be conducted in a manner consistent with that program.

This project is being reviewed for consistency with the Alaska Coastal Management Program. Written comments about the consistency of the project with the applicable ACMP statewide standards and district policies must be submitted to the Alaska Division of Governmental Coordination. For information about this consistency review, contact DGC at (907) 269-7470 or (907) 465-3562, or visit the DGC web site at http://www.gov.state.ak.us/gdc/Projects/projects.html.

Attachment 2