US Army Corps
of Engineers
Alaska District

Regulatory Branch (1145b)
Post Office Box 898
Anchorage, Alaska 99506-0898

Public Notice of Application for Permit

PUBLIC NOTICE DATE: 16 January 2004

EXPIRATION DATE: 16 February 2004

REFERENCE NUMBER: 2-2003-0165

WATERWAY NUMBER: Wasilla Lake 707

Interested parties are hereby notified that an application has been received for a Department of the Army permit for certain work in waters of the United States as described below and shown on the attached plan.

APPLICANT: MR. Howard Nugent, 4237 Meridian Loop, Wasilla, Alaska 99654, telephone 1-(907) 376-4711.

LOCATION: Located within the SW ¼, of section 1 T. 17 N., R. 1 W. Seward Meridian, at Wasilla Lake.

WORK: Place approximately 25,620, cubic yards of clean fill into approximately 5.5 acres of emergent wetlands.

PURPOSE: To construct 12 house pads, driveways, walkways, and access road.

ADDITIONAL INFORMATION: The existing waterway (constructed in the 1970s) will be expanded by dredging out existing uplands along the northern edge and eastern end to create a safer access for floatplanes. The dredged material will be disposed of in an upland site. The subdivision will provide home-sites with floatplane access to Wasilla Lake. This proposal was first released as a public notice on August 18, 2003, after meeting with Mr. Nugent and the State and Federal agencies, Mr. Nugent has changed the proposed project to reduce the impacts to the aquatic environment. He has created a wetland preserve in what was lot 1, he has reduced the size of the walkways, and will use them as utility corridors to reduce disturbance of other areas, and provided culverts to maintain cross flow. Also the width of the excavation in the channel has been reduced.

WATER QUALITY CERTIFICATION: A permit for the described work will not be issued until a certification or waiver of certification as required under Section 401 of the Clean Water Act (Public Law 95-217), has been received from the Alaska Department of Environmental Conservation.

COASTAL ZONE MANAGEMENT ACT CERTIFICATION: Section 307(c)(3) of the Coastal Zone Management Act of 1972, as amended by 16 U.S.C. 1456(c)(3), requires the applicant to certify that the described activity affecting land or water uses in the Coastal Zone complies with the Alaska Coastal Management Program. A permit will not be issued until the Office of Management and Budget, Division of Governmental Coordination has concurred with the applicant's certification.

PUBLIC HEARING: Any person may request, in writing, within the comment period specified in this notice, that a public hearing be held to consider this application. Requests for public hearings shall state, with particularity, reasons for holding a public hearing.

CULTURAL RESOURCES: The latest published version of the Alaska Heritage Resources Survey (AHRS) has been consulted for the presence or absence of historic properties, including those listed in or eligible for inclusion in the National Register of Historic Places. There are no listed or eligible properties in the vicinity of the worksite. Consultation of the AHRS constitutes the extent of cultural resource investigations by the District Engineer at this time, and he is otherwise unaware of the presence of such resources. This application is being coordinated with the State Historic Preservation Office (SHPO). Any comments SHPO may have concerning presently unknown archeological or historic data that may be lost or destroyed by work under the requested permit will be considered in our final assessment of the described work.

ENDANGERED SPECIES: No threatened or endangered species are known to use the project area.

Preliminarily, the described activity will not affect threatened or endangered species, or their critical habitat designated as endangered or threatened, under the Endangered Species Act of 1973 (87 Stat. 844). This application is being coordinated with the U.S. Fish and Wildlife Service and the National Marine Fisheries Service. Any comments they may have concerning endangered or threatened wildlife or plants or their critical habitat will be considered in our final assessment of the described work.

ESSENTIAL FISH HABITAT: The proposed work is being evaluated for possible effects to Essential Fish Habitat (EFH) pursuant to the Magnuson Stevens Fishery Conservation and Management Act of 1996 (MSFCMA), 16 U.S.C. et seq and associated federal regulations found at 50 CFR 600 Subpart K. The Alaska District includes areas of EFH as Fishery Management Plans. We have reviewed the January 20, 1999, North Pacific Fishery Management Council's Environmental Assessment to locate EFH area as identified by the National Marine Fisheries Service (NMFS).

We have determined that the described activity within the proposed area will not adversely affect EFH, including anadromous fish and federally managed fishery resources.

SPECIAL AREA DESIGNATION: None.

EVALUATION: The decision whether to issue a permit will be based on an evaluation of the probable impacts including cumulative impacts of the proposed activity and its intended use on the public interest. Evaluation of the probable impacts which the proposed activity may have on the public interest requires a careful weighing of all those factors which become relevant in each particular case. The benefits which reasonably may be expected to accrue from the proposal must be balanced against its reasonably foreseeable detriments. The decision whether to authorize a proposal, and if so, the conditions under which it will be allowed to occur, are therefore determined by the outcome of the general balancing process. That decision should reflect the national concern for both protection and utilization of important resources. All factors which may be relevant to the proposal must be considered including the cumulative effects thereof. Among those are conservation, economics, aesthetics, general environmental concerns, wetlands, cultural values, fish and wildlife values, flood hazards, floodplain values, land use, navigation, shore erosion and accretion, recreation, water supply and conservation, water quality, energy needs, safety, food and fiber production, mineral needs, considerations of property ownership, and, in general, the needs and welfare of the people. For activities involving 404 discharges, a permit will be denied if the discharge that would be authorized by such permit would not

comply with the Environmental Protection Agency's 404(b)(1) guidelines. Subject to the preceding sentence and any other applicable guidelines or criteria (see Sections 320.2 and 320.3), a permit will be granted unless the District Engineer determines that it would be contrary to the public interest.

The Corps of Engineers is soliciting comments from the public; Federal, State, and local agencies and officials; Indian Tribes; and other interested parties in order to consider and evaluate the impacts of this proposed activity. Any comments received will be considered by the Corps of Engineers to determine whether to issue, modify, condition, or deny a permit for this proposal. To make this decision, comments are used to assess impacts on endangered species, historic properties, water quality, general environmental effects, and the other public interest factors listed above. Comments are used in the preparation of an Environmental Assessment and/or an Environmental Impact Statement pursuant to the National Environmental Policy Act. Comments are also used to determine the need for a public hearing and to determine the overall public interest of the proposed activity.

Comments on the described work, with the reference number, should reach this office no later than the expiration date of this Public Notice to become part of the record and be considered in the decision. Please contact Mr. Skip Joy, at (907) 753-2712, or toll free from within Alaska at (800) 478-2712, if further information is desired concerning this notice. For additional information about our Regulatory Program, visit our web site at **www.poa.usace.army.mil/reg**.

AUTHORITY: This permit will be issued or denied under the following authorities:

( ) Perform work in or affecting navigable waters of the United States - Section 10 Rivers and Harbors Act 1899 (33 U.S.C. 403).

(X) Discharge dredged or fill material into waters of the United States - Section 404 Clean Water Act (33 U.S.C. 1344). Therefore, our public interest review will consider the guidelines set forth under Section 404(b) of the Clean Water Act (40 CFR 230).

( ) Transport dredged material for the purpose of dumping it into ocean waters - Section 103 Marine Protection, Research, and Sanctuaries Act of 1972 (33 U.S.C. 1413). Therefore, our public interest review will consider the criteria established under authority of Section 102(a) of the Marine Protection, Research and Sanctuaries Act of 1972, as amended (40 CFR Parts 220 to 229), as appropriate.

A plan, Notice of Application for Certification of Consistency with the Alaska Coastal Management Program, and Notice of Application for State Water Quality Certification are attached to this Public Notice.

District Engineer
U.S. Army, Corps of Engineers

Attachments

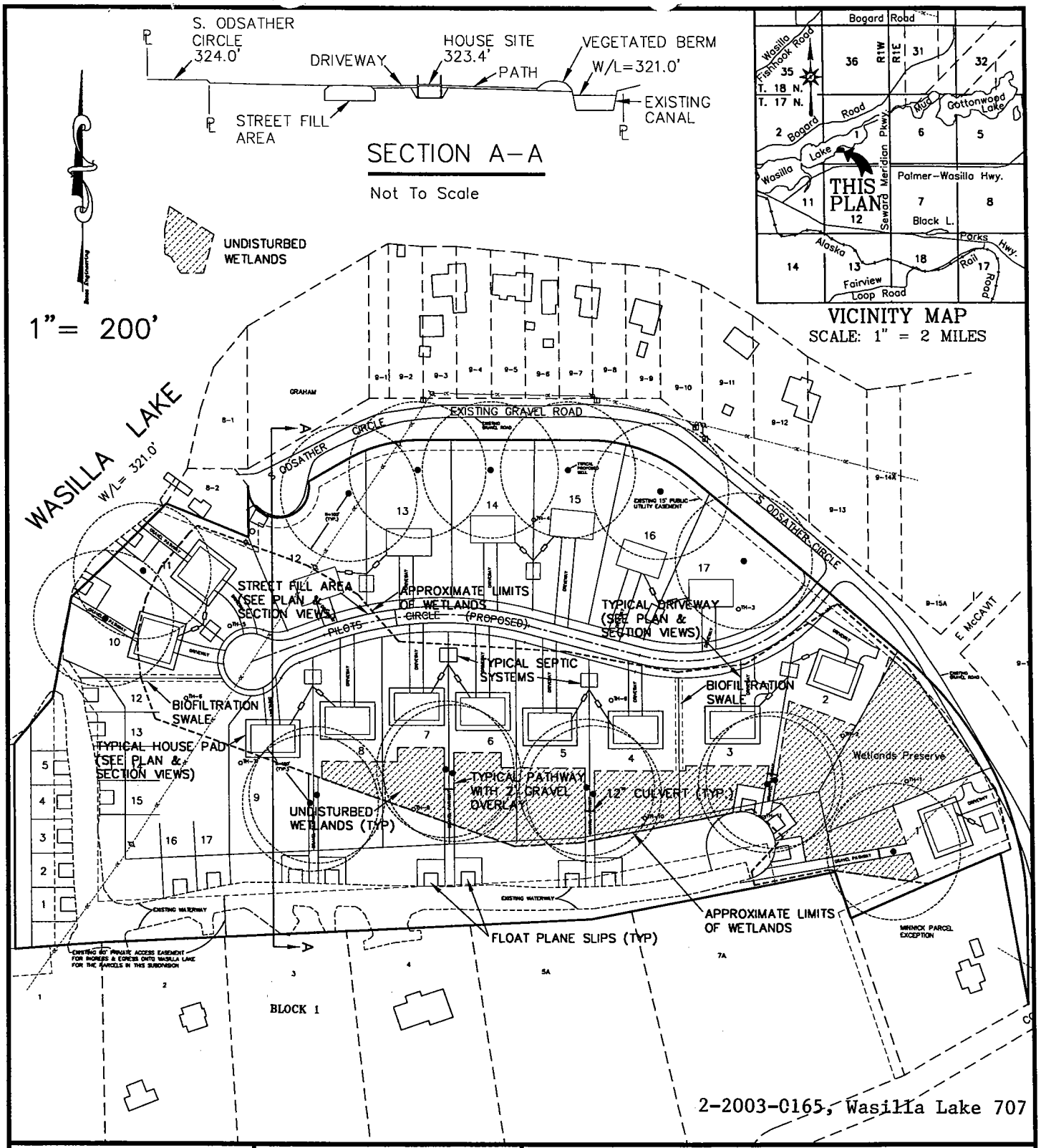

2-2003-0165, Wasilla Lake 707

AGENT:

Besse Engineering

1890 Jaime Marie Circle
Wasilla, Alaska 99654
907-357-4257

APPLICANT:

Howard Nugent
4237 Meridian Loop
Wasilla, Alaska 99654

SITE PLAN

TRACT A, FRED M. HURD SUBDIVISION, ADDITION No. 3

LOCATED IN SW1/4, SEC. 1, T17N, R1W, SEWARD MERIDIAN, ALASKA

CONTAINING 18.76 ACRES, MORE OR LESS

Grid: WA11	Scale: 1"= 200'	Field Book: B03-01	Dw'g. HURD.DWG
Drawn: MLK	Date: 12/18/03	W. O. No. B03-01	Sheet: 1

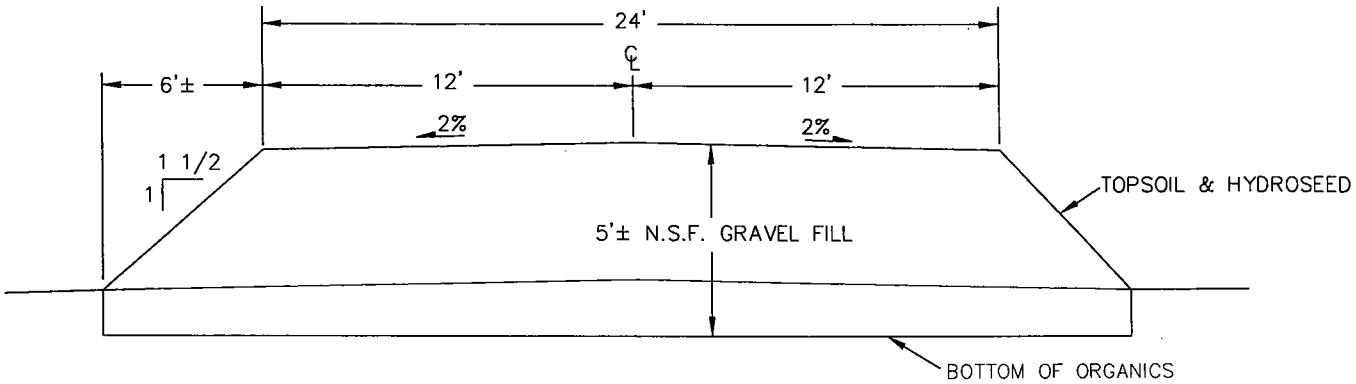

TYPICAL ROADWAY SECTION

Not To Scale

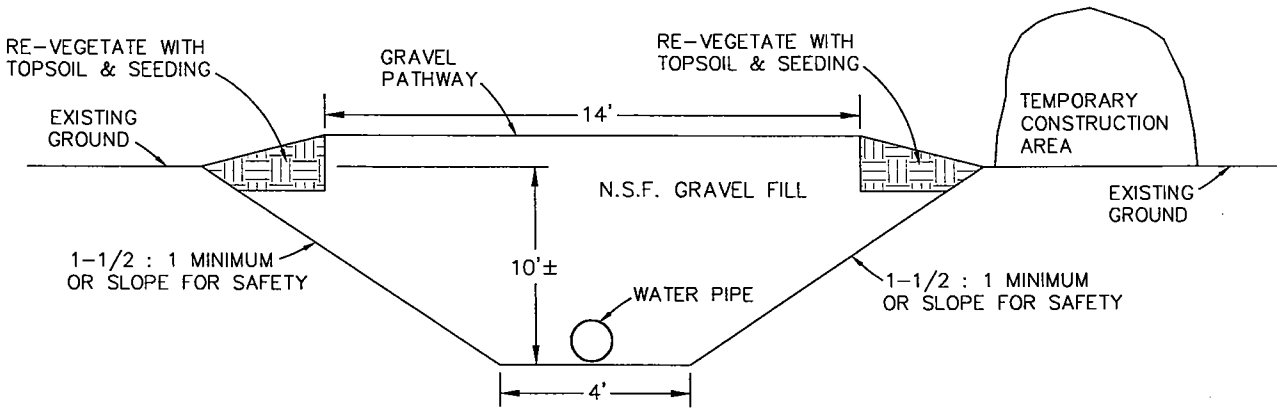

TYPICAL TRENCH SECTION

Not To Scale

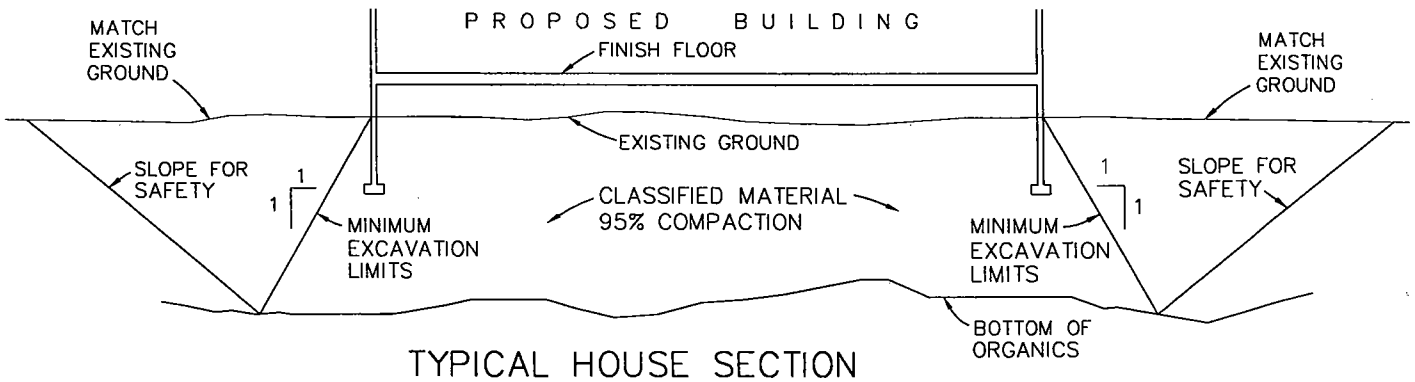

TYPICAL HOUSE SECTION

Not To Scale

2-2003-0165, wasilla Lake 707

AGENT:

Besse Engineering

1890 Jaime Marie Circle
Wasilla, Alaska 99654
907-357-4257

APPLICANT:

Howard Nugent
4237 Meridian Loop
Wasilla, Alaska 99654

ROADWAY, TRENCH & HOUSE SECTIONS

TRACT A, FRED M. HURD SUBDIVISION, ADDITION No. 3

LOCATED IN SW1/4, SEC. 1, T17N, R1W, SEWARD MERIDIAN, ALASKA

CONTAINING 18.76 ACRES, MORE OR LESS

Grid: WA11	Scale: No Scale	Field Book: B03-01	Dw'g. HURD.DWG
Drawn: MLK	Date: 12/18/03	W. O. No. B03-01	Sheet: 2

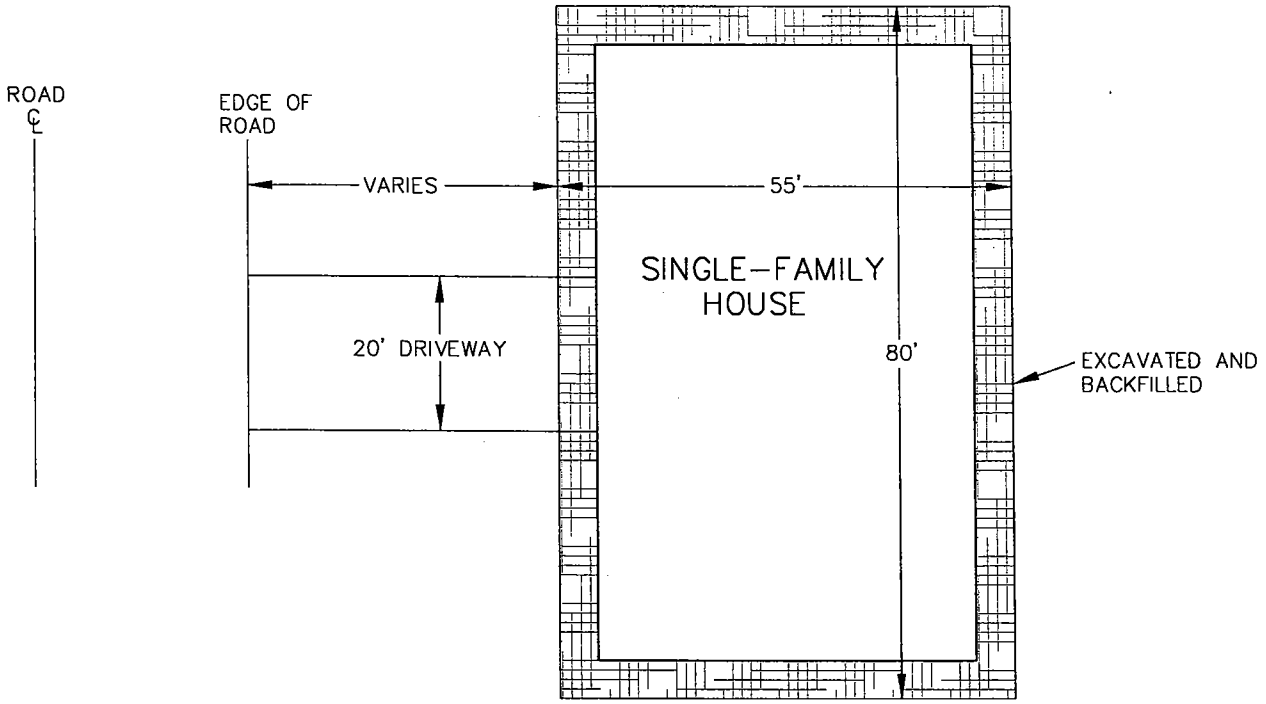

TYPICAL HOUSE LOT PLAN VIEW

Not To Scale

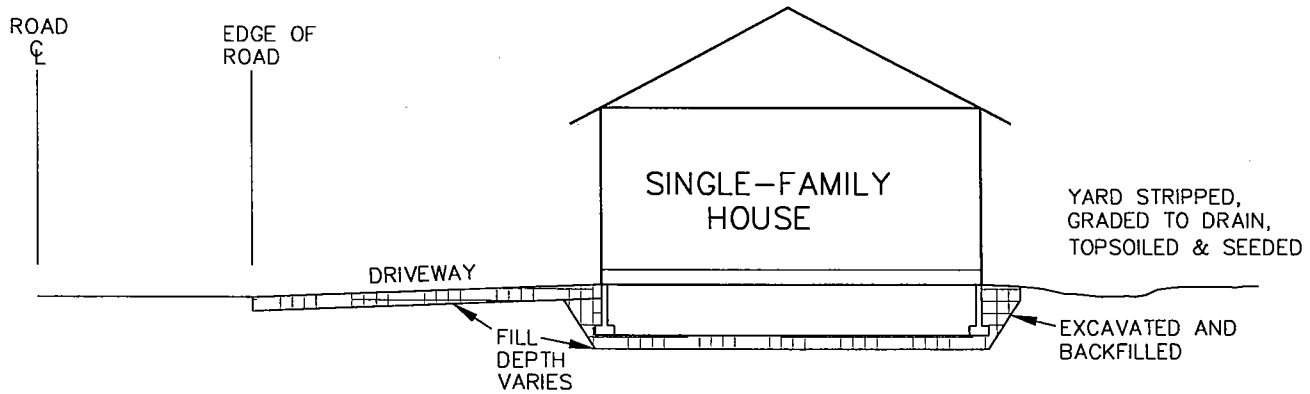

TYPICAL HOUSE LOT SECTION VIEW

Not To Scale

2-2003-0165, Wasilla Lake 707

AGENT:

Besse Engineering

1890 Jaime Marie Circle
Wasilla, Alaska 99654
907-357-4257

APPLICANT:

Howard Nugent
4237 Meridian Loop
Wasilla, Alaska 99654

TYPICAL HOUSE PLAN & SECTION VIEWS

TRACT A, FRED M. HURD SUBDIVISION, ADDITION No. 3

LOCATED IN SW1/4, SEC. 1, T17N, R1W, SEWARD MERIDIAN, ALASKA

CONTAINING 18.76 ACRES, MORE OR LESS

Grid: WA11	Scale: No Scale	Field Book: B03-01	Dw'g. HURD.DWG
Drawn: MLK	Date: 12/5/03	W. O. No. B03-01	Sheet: 3

FRANK H. MURKOWSKI, GOVERNOR

STATE OF ALASKA

OFFICE OF THE GOVERNOR

DEPT. OF ENVIRONMENTAL CONSERVATION

DIVISION OF AIR AND WATER QUALITY
Non-Point Source Control Section
401 Certification Program

NOTICE OF APPLICATION FOR STATE WATER QUALITY CERTIFICATION

Any applicant for a federal license or permit to conduct an activity that might result in a discharge into navigable waters, in accordance with Section 401 of the Clean Water Act of 1977 (PL95-217), also must apply for and obtain certification from the Alaska Department of Environmental Conservation that the discharge will comply with the Clean Water Act, the Alaska Water Quality Standards, and other applicable State laws. By agreement between the U.S. Army Corps of Engineers and the Department of Environmental Conservation, application for a Department of the Army permit to discharge dredged or fill material into navigable waters under Section 404 of the Clean Water Act also may serve as application for State Water Quality Certification.

Notice is hereby given that the application for a Department of the Army Permit described in the Corps of Engineers' Public Notice No. **2-2003-0165,** serves as application for State Water Quality Certification from the Department of Environmental Conservation.

After reviewing the application, the Department may certify that there is reasonable assurance that the activity, and any discharge that might result, will comply with the Clean Water Act, the Alaska Water Quality Standards, and other applicable State laws. The Department also may deny or waive certification.

Any person desiring to comment on the project with respect to Water Quality Certification may submit written comments within 30 days of the date of the Corps of Engineer's Public Notice to:

Department of Environmental Conservation
WQM/401 Certification
555 Cordova Street
Anchorage, Alaska 99501-2617
Telephone: (907) 269-7564
FAX: (907) 269-7508

Attachment 2

FRANK H. MURKOWSKI, GOVERNOR

STATE OF ALASKA

OFFICE OF THE GOVERNOR

OFFICE OF PROJECT MANAGEMENT AND PERMITTING
DIVISION OF GOVERNMENTAL COORDINATION

SOUTHCENTRAL REGIONAL OFFICE
550 West 7th Avenue, Suite 1660
ANCHORAGE, ALASKA 99501-3568
PHONE: (907) 269-7470/FAX: (907) 269-3981

NOTICE OF APPLICATION FOR CERTIFICATION OF CONSISTENCY WITH THE ALASKA COASTAL MANAGEMENT PROGRAM

Notice is hereby given that a request is being filed with the Division of Governmental Coordination for a consistency determination, as provided in Section 307(c)(3) of the Coastal Zone Management Act of 1972, as amended [16 U.S.C. 1456(c)(3)], that the project described in the Corps of Engineers Public Notice No. **2-2003-0165,** will comply with the Alaska Coastal Management Program and that the project will be conducted in a manner consistent with that program.

This project is being reviewed for consistency with the Alaska Coastal Management Program. Written comments about the consistency of the project with the applicable ACMP statewide standards and district policies must be submitted to the Alaska Division of Governmental Coordination. For information about this consistency review, contact DGC at (907) 269-7470 or (907) 465-3562, or visit the DGC web site at http://www.gov.state.ak.us/gdc/Projects/projects.html.

Attachment 3